User's Manual

Purifier® Vertical Clean Benches

Models
3970200, 3970201, 3970203, 3970204, 3970220, 3970221, 3970223, 3970224, 3970300, 3970301, 3970303, 3970304, 3970320, 3970321, 3970323, 3970324, 3970400, 3970401, 3970403, 3970404, 3970420, 3970421, 3970423, 3970424

Labconco's Mascot,
Labby the LABster

Protecting your laboratory environment

LABCONCO®

For more information, please contact us:

ExpotechUSA
10700 Rockley Road
Houston, Texas 77099
USA

281-496-0900 [voice]

281-496-0400 [fax]

E-mail: sales@expotechusa.com

Website: www.ExpotechUSA.com

Warranty

Labconco provides a warranty on all parts and factory workmanship. The warranty includes areas of defective material and workmanship, provided such defect results from normal and proper use of the equipment.

The warranty for all Labconco products will expire one year from date of installation or two years from date of shipment from Labconco, whichever is sooner, except the following:

- Purifier® Delta® Series Biological Safety Cabinets and PuriCare® Animal Laboratory Research Enclosures carry a three-year warranty from date of installation or four years from date of shipment from Labconco, whichever is sooner.
- SteamScrubber and FlaskScrubber Glassware Washers carry a two-year warranty from date of installation or three years from date of shipment from Labconco, whichever is sooner.
- Carts carry a lifetime warranty.
- Glassware is not warranted from breakage when dropped or mishandled.

This limited warranty covers parts and labor, but not transportation and insurance charges. In the event of a warranty claim, contact Labconco Corporation or the dealer who sold you the product. If the cause is determined to be a manufacturing fault, the dealer or Labconco Corporation will repair or replace all defective parts to restore the unit to operation. Under no circumstances shall Labconco Corporation be liable for indirect, consequential, or special damages of any kind. This statement may be altered by a specific published amendment. No individual has authorization to alter the provisions of this warranty policy or its amendments. Lamps and filters are not covered by this warranty. Damage due to corrosion or accidental breakage is also not covered.

Limitation of Liability

The disposal and/or emission of substances used in connection with this equipment may be governed by various federal, state, or local regulations. All users of this equipment are required to become familiar with any regulations that apply in the user's area concerning the dumping of waste materials in or upon water, land, or air and to comply with such regulations. Labconco Corporation is held harmless with respect to user's compliance with such regulations.

TABLE OF CONTENTS

CHAPTER 1: INTRODUCTION 1
- ISO Class 5 Definition 2
- About This Manual 2
- Typographical Conventions 3

CHAPTER 2: PREREQUISITES 5
- Support, Vibration & Movement Requirements 6
- Location and Air Current Requirements 6
- Airflow Specifications 6
- Electrical Requirements 7
- Space Requirements 7

CHAPTER 3: GETTING STARTED 8
- Unpacking the Clean Bench 9
- Installing Vertical Clean Bench on a Supporting Structure and Work Surface 9
- Verifying HEPA Filter Integrity 12
- Connecting the Electrical Supply Source to the Vertical Clean Bench 12
- Setting the Downflow Velocity with Speed Control Adjustment 13
- Validating the Vertical Clean Bench 13
- Sealing the Vertical Clean Bench to the Work Surface 14

CHAPTER 4: PERFORMANCE FEATURES AND SAFETY PRECAUTIONS 15
- Components 16
- Safety Precautions 20

CHAPTER 5: APPROPRIATE APPLICATIONS FOR YOUR VERTICAL CLEAN BENCH 23
- Routine Daily Work Procedures 23
- Suitable Applications 24
- HEPA Filter Applications, Suitability & Guidelines 25

CHAPTER 6 MAINTAINING YOUR VERTICAL CLEAN BENCH 26
- Routine Maintenance Schedule 27
- When to Replace HEPA Filters 27
- How to Install a New HEPA Filter 28
- HEPA Filter Leak Test 30

Setting the Downflow Velocity with the Speed Control Adjustment 32
Calibrate and Operate the Airflow Monitor 32
Initial Certification 36
Re-Certification 36
Fluorescent Light Replacement 36
UV Light Replacement (If equipped) 37
Motorized Impeller Replacement 37
Speed Control Replacement 39

CHAPTER 7 ACCESSORIZING & MODIFYING YOUR VERTICAL CLEAN BENCH 40

CHAPTER 8 TROUBLESHOOTING & SERVICER OPERATING LOG 44

APPENDIX A: VERTICAL CLEAN BENCH COMPONENTS AND REPLACEMENT PARTS 48

APPENDIX B: DIMENSIONS 53

APPENDIX C: VERTICAL CLEAN BENCH SPECIFICATIONS 55

APPENDIX D: REFERENCES 60

DECLARATION OF CONFORMITY 61

CHAPTER 1
INTRODUCTION

Congratulations on your purchase of a Labconco Purifier® Vertical Clean Bench. Your enclosure provides product protection. It is the result of Labconco's more than 30 years experience in manufacturing filtered enclosures.

These enclosures will effectively provide product protection from airborne particulate matter. During operation, room air is drawn through the prefilter on top, forced through the blower and then through the HEPA filter and diffuser. The clean air in the work area in the enclosure meets or exceeds ISO Standard Class 5 conditions defined per ISO Standard 14644-1 and Class 100 conditions as defined by Federal Standard 209E. The enclosure is set to deliver nominal downward airflow of 45-65 feet per minute. Each enclosure uses a single HEPA filter, which is rated at least 99.99% efficient for 0.3-micron particles. The Purifier enclosures offer many unique features to enhance performance. To take full advantage of them, please acquaint yourself with this manual and keep it handy for future reference. If you are unfamiliar with how filtered Vertical Clean Benches operate, please review *Chapter 4: Performance Features and Safety Precautions* before you begin working. Even if you are an experienced user, please review *Chapter 5: Using Your Vertical Clean Bench,* which describes the enclosure features.

ISO Class 5 Definition

Airborne particulate cleanliness inside any clean bench or enclosure is designated by ISO Class 5, which is equivalent to 3520 particles 0.5 µm or larger per cubic meter of air per ISO Standard 14644-1. ISO Class 5 cleanliness is illustrated in the table to follow and is equivalent to Class 100 air conditions as defined by Federal Standard 209E. Class 100 is equal to 100 particles 0.5 µm or larger per cubic foot of air.

Table 1-1 Selected airborne particulate cleanliness classes for cleanrooms and clean zones.

ISO classification number (N)	Maximum concentration limits (particles/m3 of air) for particles equal to and larger than the considered sizes shown below (concentration limits are calculated in accordance with 3.2 of Standard 14644-1)					
	0.1 µm	**0.2 µm**	**0.3 µm**	**0.5 µm**	**1 µm**	**5 µm**
ISO Class 1	10	2				
ISO Class 2	100	24	10	4		
ISO Class 3	1 000	237	102	35	8	
ISO Class 4	10 000	2 370	1 020	352	83	
ISO Class 5	100 000	23 700	10 200	3 520	832	29
ISO Class 6	1 000 000	237 000	102 000	35 200	8 320	293
ISO Class 7				352 000	83 200	2 930
ISO Class 8				3 520 000	832 000	29 300
ISO Class 9				35 200 000	8 320 000	293 000

Table 1-1 ISO Classification Number (N)

About This Manual

This manual is designed to help you learn how to install, use, and maintain your Clean Bench.

Chapter 1: Introduction provides a brief overview of the Clean Bench, explains the organization of the manual, and defines the typographical conventions used in the manual.

Chapter 2: Prerequisites explains what you need to do to prepare your site before you install the Clean Bench. Electrical and service requirements are discussed.

Chapter 3: Getting Started contains the information you need to properly unpack, inspect, install, and certify the Clean Bench.

Chapter 4: Performance Features and Safety Precautions explains how the Purifier Vertical Clean Bench operates and the appropriate precautions you should take when using it.

Chapter 5: Appropriate Applications for your Vertical Clean Bench discusses the basic operation of how to prepare, use and shut down your Clean Bench.

Chapter 6: Maintaining Your Vertical Clean Bench explains how to perform routine maintenance on the Clean Bench.

Chapter 7: Accessorizing Your Vertical Clean Bench explains acceptable modifications to the Clean Bench or how to add accessories.

Chapter 8: Troubleshooting contains a table of problems you may encounter while using the Clean Bench including probable causes and suggested corrective actions.

Appendix A: Components and Replacement Parts contains labeled diagrams of all of the components of the Clean Benches.

Appendix B: Dimensions contains comprehensive diagrams showing all of the dimensions for the Clean Benches.

Appendix C: Vertical Clean Bench Specifications contains the electrical requirements for clean benches. Wiring diagrams are also included.

Appendix D: References lists the various resources available that address clean rooms and Clean Benches.

Typographical Conventions

Recognizing the following typographical conventions will help you understand and use this manual:

- Book, chapter, and section titles are shown in italic type (e.g., *Chapter 3: Getting Started*).
- Steps required to perform a task are presented in a numbered format.
- Comments located in the margins provide suggestions, reminders, and references.
- Critical information is presented in boldface type in paragraphs that are preceded by the exclamation icon. Failure to comply

with the information following an exclamation icon may result in injury to the user or permanent damage to the enclosure.

- Critical information is presented in boldface type in paragraphs that are preceded by the wrench icon. Only a trained certifier or contractor should only perform these operations. Failure to comply with the information following a wrench icon may result in injury to the user or permanent damage to your Clean Bench.

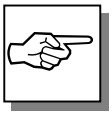

- Important information is presented in capitalized type in paragraphs that are preceded by the pointer icon. It is imperative that the information contained in these paragraphs be thoroughly read and understood by the user.

- A number icon precedes information that is specific to a particular model of enclosure. The 2' icon indicates the text is specific to the 2-foot wide model. The 3' icon indicates the text is specific to the 3-foot model, etc.

CHAPTER 2
PREREQUISITES

Before you install the Vertical Clean Bench, you need to prepare your site for installation. You must be certain that the area is level and of solid construction. In addition, a dedicated source of electrical power should be located near the installation site to power the Clean Bench, and other apparatus. Additionally, the enclosure should be strategically placed in the lab to provide efficient workflow.

Carefully read this chapter to learn the requirements for your installation site:

- The support, vibration and movement requirements.
- The location and air current requirements.
- The exhaust and blower requirements.
- The electrical power requirements.
- The space requirements.

Refer to *Appendix B: Dimensions* for complete Vertical Clean Bench dimensions.

Refer to *Appendix C: Vertical Clean Bench Specifications* for complete Vertical Clean Bench electrical and environmental conditions, specifications and requirements.

Support, Vibration and Movement Requirements

At a minimum, the supporting structure usually consists of a base cabinet or base stand and chemically-resistant work surface.

Location and Air Current Requirements

Purifier Vertical Clean Benches have been designed to provide particulate-free clean air meeting Class 5 conditions by negating typical cross drafts and turbulence within the opening. However, as a precautionary safety measure and a higher level of quality management, it is recommended that the clean bench be placed in an area away from:

- High traffic areas where walking might cause an air disturbance or be a nuisance.
- Overhead or wall HVAC diffusers, fans, radiators or other lab equipment producing air currents.
- Doorways or windows that may be opened.

Airflow Specifications

Purifier Vertical Clean Benches use an integral motorized impeller to draw room air from the top and through the enclosure. This room air is then pushed down through the HEPA filter. The enclosure is factory set to deliver 45-65 fpm downflow velocity measured 6" below the upper diffuser. The Class 5 HEPA-filtered air flows across the work area and exits out the front of the enclosure.

Data for the outflow exhaust volume, downflow velocities and out-flow face velocities are listed for each Vertical Clean Bench model below.

Enclosure Width	Model Description	Downflow Velocity (fpm)	Out-Flow Exhaust Volume (CFM)	Noise Pressure db(A)	Average Outflow Face Velocity (fpm)
2'	2' Vertical Clean Bench	30 40 50 60	120 165 210 250	53-57 58-60 60-61 62-63	85 115 145 170
3'	3' Vertical Clean Bench	30 40 50 60	180 250 310 370	58-60 60-62 61-63 63-54	85 115 145 170
4'	4' Vertical Clean Bench	30 40 50 60	240 330 420 500	60-62 62-64 66-69 68-70	85 115 145 170

Electrical Requirements

Standard duplex electrical receptacles should be nearby for connecting the Vertical Clean Bench, or other equipment. The enclosures include iris pass-throughs to allow electrical cords through the back of the enclosure without leaving a large hole.

Space Requirements

The dimensions for all the different models are shown in *Appendix B: Dimensions.*

CHAPTER 3
GETTING STARTED

Now that the site for your Vertical Clean Bench is properly prepared, you are ready to unpack, inspect, install, and validate your Clean Bench. Read this chapter to learn how to:

- Unpack and move the Clean Bench.
- Set up the enclosure with the proper supporting structure and work surface.
- Verify HEPA filters integrity.
- Connect the electrical supply.
- Set the downflow velocity with the speed control adjustment.
- Validate enclosure airflow.
- Seal the enclosure to the work surface.

Depending upon which model you are installing, you may need common mechanical and electrical installation tools in addition to wrenches, ratchets, sockets, a nut driver set, a flat-blade screwdriver, a Phillips screwdriver, and a carpenter level to complete the instructions in the chapter.

!

Each Clean Bench model weighs between 125 to 195 lbs. each (55 to 85 kg). The shipping container allows for lifting with a mechanical lift truck or floor jack. If you must lift the enclosure manually, follow safe-lifting guidelines. Do not lift by the lower air foil.

Unpacking the Clean Bench

Carefully remove the shrink-wrap or carton on the Clean Bench and inspect it for damage that may have occurred in transit. If damaged, notify the delivery carrier immediately and retain the entire shipment intact for inspection by the carrier.

The United States Interstate Commerce Commission rules require that claims be filed with the delivery carrier within fifteen (15) days of delivery.

DO NOT RETURN GOODS WITHOUT THE PRIOR AUTHORIZATION OF LABCONCO. UNAUTHORIZED RETURNS WILL NOT BE ACCEPTED.

IF CLEAN BENCH WAS DAMAGED IN TRANSIT, YOU MUST FILE A CLAIM DIRECTLY WITH THE FREIGHT CARRIER. LABCONCO CORPORATION AND ITS DEALERS ARE NOT RESPONSIBLE FOR SHIPPING DAMAGES.

Do not discard the packing material until you have checked all of the components and tested the Clean Bench.

We recommend that you do not remove the Clean Bench from its shipping container until it is ready to be placed into its final location. Move the Clean Bench by placing a flat, low dolly under the shipping skid, or by using a floor jack.

Do not move the Clean Bench by tilting it onto a hand truck.

Installing the Vertical Clean Bench on a Supporting Structure and Work Surface

Use caution when lifting or moving the Clean Bench.

When installing the Clean Bench onto a chemical-resistant work surface or benchtop, ensure that the structure can safely support the combined weight of the Clean Bench and any related equipment.

The work surface should be at least as wide and deep as the enclosure to properly support it. The front of the Clean Bench should be aligned within 0.30" (8 mm) of the front of the work surface. Mounting holes are provided in the Labconco accessory work surfaces to secure the Clean Bench.

Work Surface Specifications
The work surface should be smooth, rigid and durable, such as a chemical-resistant epoxy resin. The surface should be non-porous and resistant to the materials used in conjunction with the Purifier Vertical Clean Bench. The work surface should also contain a dished recessed area for containing primary spills.

Vertical Clean Bench Work Surface

1. Level the base cabinet or stand and the work surface. See Figure 3-1.
2. Position the work surface in its intended location and with the front of the work surface towards you. (Rear mounting holes are located close to the rear edge.)
3. Secure the work surface to the base cabinet or stand with a structural adhesive or silicone sealant.
4. Insert the supplied mounting screws in the four holes. Allow a minimum of 1/8" clearance under the head of the screw for positioning the Clean Bench.
5. Place the Clean Bench on the work surface and slide the rear flange and front air foil flanges under the mounting screw heads.
6. Tighten the four screws to complete the installation.

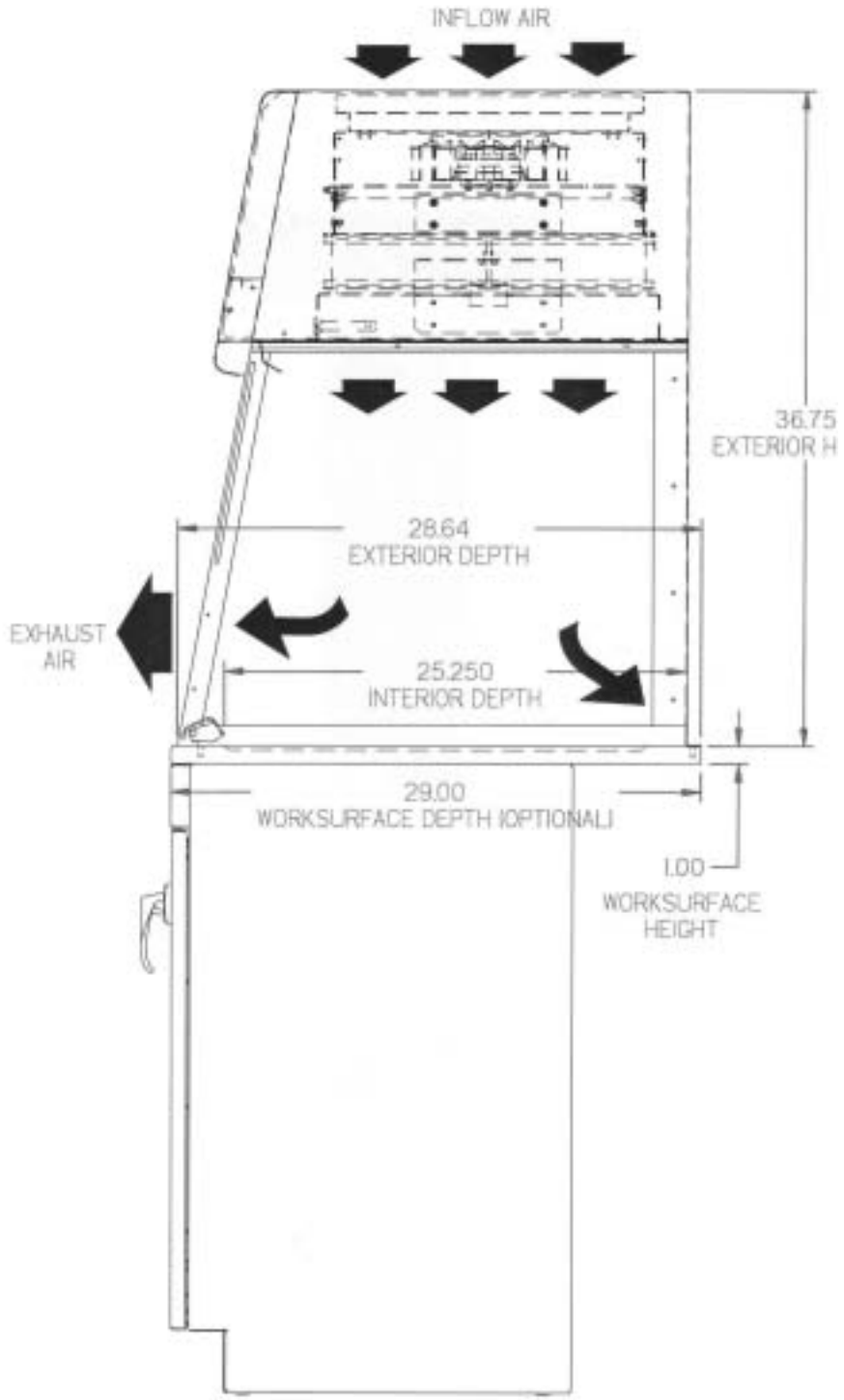

Figure 3-1
Vertical Clean Bench Installation

Verifying HEPA Filter Integrity

HEPA

The HEPA filter is shipped installed with the gasket on the downstream side. The HEPA filter is leak checked at Labconco. A second leak check is recommended before using the enclosure and at least annually thereafter. Consult your Safety Officer and Chapter 6 for the HEPA Filter Leak Test. See Figure 4-2 for HEPA filter location, HEPA filter gasket, and filter clamp bolts. All seams downstream of the HEPA filter are jacketed by positive pressure. This intrinsically safe design ensures Class 5 conditions inside the Vertical Clean Bench.

HEPA

HEPA Filter		Appropriate Use
Filter Size	Part No.	HEPA filters are high-efficiency particulate air filters having a particulate removable efficiency of 99.99% for particles with a diameter of 0.3 micron.
2'	3707900	
3'	3707901	
4'	3707902	

Connecting the Electrical Supply Source to the Vertical Clean Bench

115V Models

Simply connect the 115V power cord supplied to the IEC electrical supply plug on the back of the Clean Bench. If using at 50 Hz operations, blower performance maximum airflow will be reduced by 17%.

230V Models

The 230V is shipped without a plug. Install the appropriate plug for your electrical specifications per local codes.

Setting the Downflow Velocity with the Speed Control Adjustment

Adjustment of the speed control gives the correct downflow velocity and is located behind the front panel. The downflow velocity should be from 30-65 fpm for Class 100 (ISO class 5) conditions. ISO Class 5 clean air conditions are maximized at a setting within this range. The Vertical Clean Bench is factory set at 55 ± 10 fpm downflow velocity. (Consult your Safety Officer for airflow recommendations for your application). Working at the downflow velocity appropriate for the application will give the quietest operation. Downflow velocity measurements are made using an anemometer. An electric anemometer can be obtained from your laboratory supply dealer. Downflow velocity measurements should be taken 6" below the interior upper diffuser. Using a small Phillips screwdriver, adjust the speed control to give the required downflow velocity. See Figures 6-1 and 6-2 in Chapter 6 to locate the speed control. The downflow velocity is increased by turning the speed control counterclockwise and clockwise to decrease downflow velocity.

Validating the Vertical Clean Bench

To determine the actual downflow velocity, airflow velocity readings are taken. This should be done 6" down from the top of the interior upper diffuser. The “average downflow velocity” is achieved by taking readings in three rows across the enclosure with the readings 6" from the ends and evenly spaced every 6". Refer to the exhaust specifications table in Chapter 2 for proper airflow volumes and downflow velocities for your particular model. Validation should be completed by a certified technician.

The Purifier Vertical Clean Benches have been tested at Labconco before shipment and provide ISO Class 5 clean air conditions inside the enclosure. Labconco also performed extensive performance testing to validate the clean benches for product protection under ISO Class 5 conditions. For copies of these validation reports, contact Labconco Customer Service.

Sealing the Vertical Clean Bench to the Work Surface

When the Vertical Clean Bench has been set in place and wired, it may be sealed at the work surface to prevent materials from collecting under the walls. A bead of silicone sealant is recommended to seal the Vertical Clean Bench to the work surface.

CHAPTER 4
PERFORMANCE FEATURES AND SAFETY PRECAUTIONS

The Purifier Vertical Clean Bench is designed to provide product protection only from airborne particulate matter. During operation, room air is drawn from the top and filtered by the HEPA filter providing Class 5 conditions inside the enclosure. The Purifier Vertical Clean Bench delivers Class 5 air conditions when operating at downflow velocities of 30 to 65 feet per minute. The HEPA filter is jacketed by negative pressure preventing contaminated air inside the enclosure and ensuring Class 5 air conditions inside the enclosure.

The Purifier Vertical Clean Bench HEPA filter is located behind the front panel. Users are encouraged to routinely check airflow to satisfy Class 5 air conditions inside the enclosure or purchase a model with an airflow monitor. For additional surface decontamination inside the enclosure, users are encouraged to use the model with the internal UV light and UV sash closure.

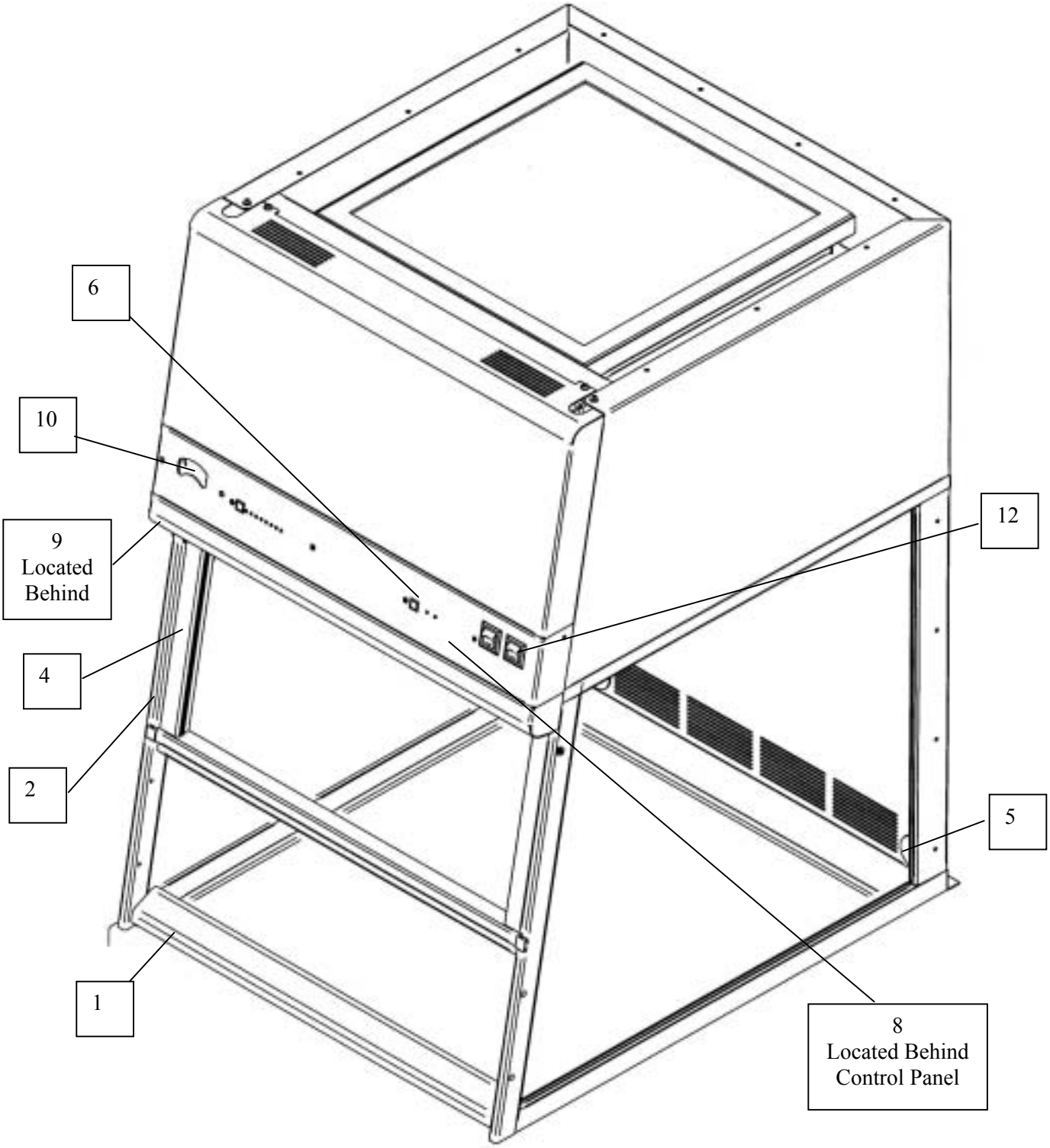

Figure 4-1

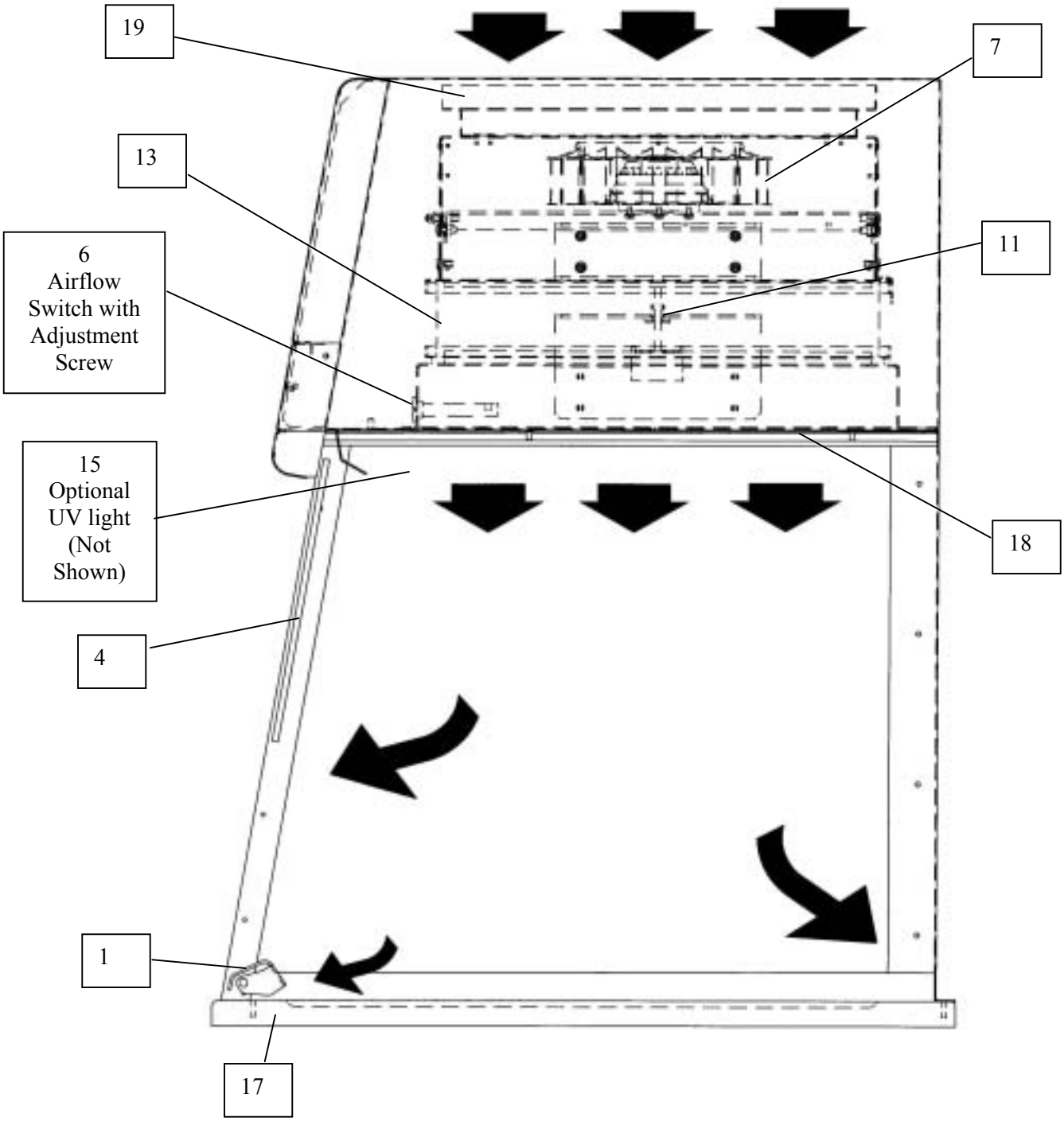

Figure 4-2
Vertical Clean Bench Airflow Diagram

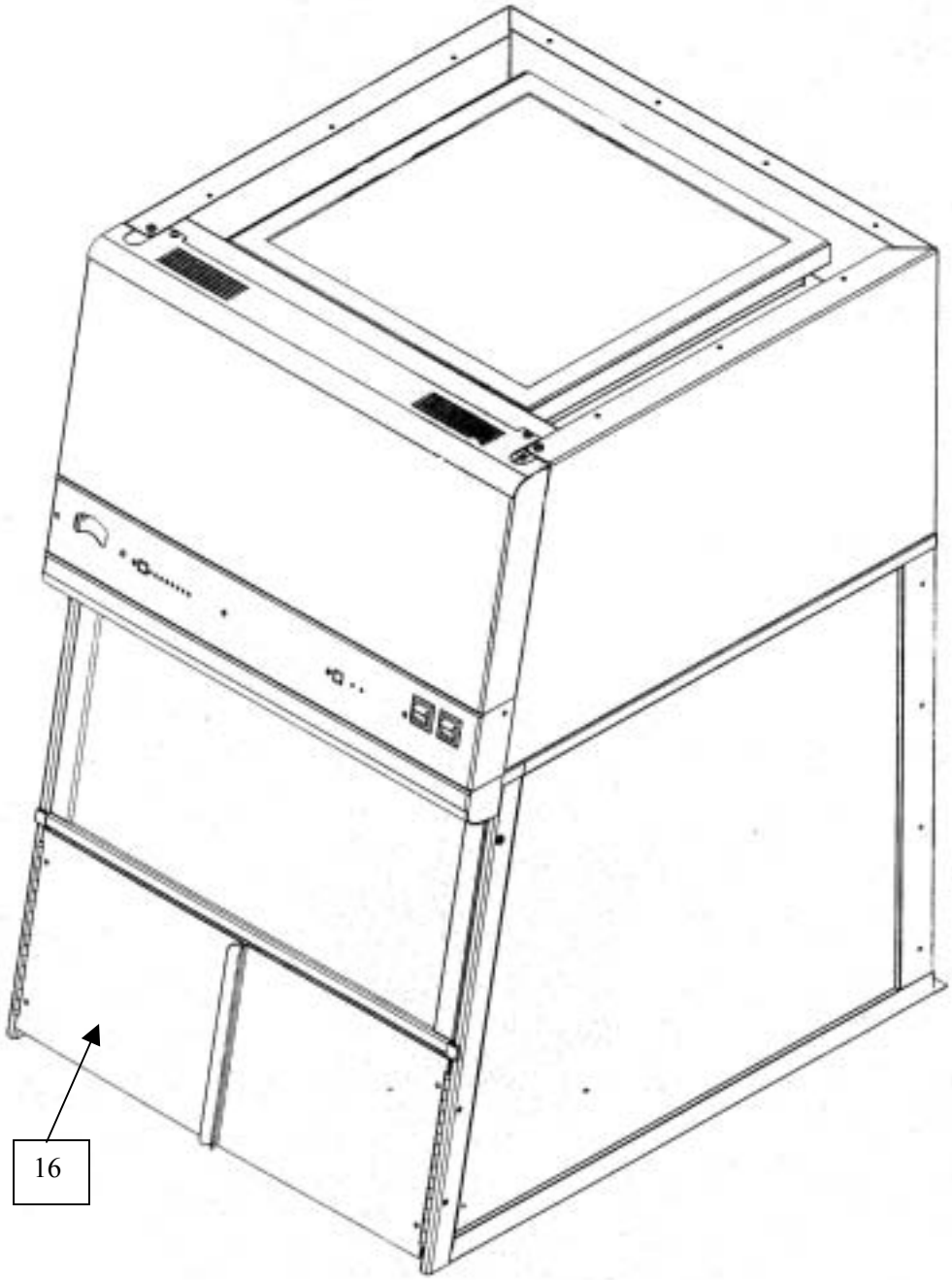

Figure 4-3
Optional UV Sash Closure

1. **Aerodynamic Lower Air Foil** allows air to sweep the work surface and promote ISO Class 5 air conditions inside the enclosure. See Figure 4-1.
2. **Ergonomic Slope** of 10 degrees provides maximum visibility and comfort, reduces glare, thereby minimizing operator fatigue. See Figure 4-1.
3. **Internal Depth of 25"** provides necessary depth to work inside the enclosure. See Figure 4-1.
4. **Safety Glass Sash with Spring-Loaded Latch** has a wiping seal and features a spring-loaded latch to secure sash open for loading and cleaning. The sash must be down for normal operation. See Figure 4-1.
5. **Utility Ports with Iris** allows electrical cords and data cords to pass through the back of enclosure without leaving a large hole. The enclosure ships with solid plugs. Iris plugs are included with the User's Manual. See Figure 4-1 and 4-2.
6. **Optional Guardian™ Airflow Monitor** continuously monitors airflow. An audio/visual alarm alerts the user to low airflow conditions. The Guardian™ Airflow Monitor is an available option on all Vertical Clean Bench models. See Figure 4-1 and 4-2.
7. **Inherently Safe Impeller** has a negative pressure plenum that surrounds the positive pressure impeller so that if a leak should occur, the unfiltered air is captured and refiltered. See Figure 4-2.
8. **Speed Control** regulates the speed of the motorized impeller and is used by the certifier to validate and adjust the downflow velocity. Located behind the front panel. See Figure 4-2.
9. **Fluorescent Lamp** is located above the work area, out of contact with the clean air. A safety glass window beneath the lamp distributes the light evenly across the work surface. See Figure 4-1.
10. **Filter Pressure Gauge** indicates the pressure across the HEPA filter to help predict HEPA filter loading. See Figure 4-1.

11. **Filter Clamping Bolt** evenly seals the HEPA filter to the frame of the enclosure. See Figure 4-1 and 4-2.

12. **Control Panel**. The control panel, which is located above the sash, contains the filter pressure gauge, control switches and electronics. See Figure 4-1.

13. **HEPA (High Efficiency Particulate Air) Filter** is rated to remove 99.99% of all particles 0.3 micron in size. See Figure 4-2.

14. **Lamp Ballast (Not Shown)** for the fluorescent lamp is located behind the control panel.

15. **UV (Ultraviolet) Lamp (Not Shown)**, found only on some Clean Bench models, allows the operator to surface disinfect the work area of the enclosure when it is not in use. The UV light rays will not penetrate the plane of the sash and lower air foil.

16. **UV Sash Closure (Optional)** provides added safety to prevent access inside the enclosure. See Figure 4-3.

17. **Accessory Work Surface** is dished and contoured to fit the dimensions of the Clean Bench to contain spills.

18. **Upper Diffuser Screen** provides protection for the HEPA Filter and promotes even distribution of downflow air. See Figure 4-2.

19. **Prefilter (roughing)** enhances the life of the HEPA filter by trapping large particles. It should be replaced quarterly.

Safety Precautions

1. Although the Clean Bench has been engineered to maintain Class 5 air conditions, caution should always be used while working. Prior to using the Clean Bench, check to make sure that the blower is operating and periodically ensure that air is flowing through the enclosure at its specified downflow velocity of 30 to 65 fpm. The use of an airflow monitor is recommended to alert the user to a problem with airflow.

2. Use good housekeeping in the Clean Bench at all times. Clean up spills immediately. Periodically clean Clean Bench interior.
3. Do not overload the work surface with apparatus or work material.
4. The Purifier Vertical Clean Bench should never be used with biohazardous materials, toxins, acids, or radionuclides. Air from the work area is dispersed directly into the laboratory from the Clean Bench. A qualified Safety Officer must carefully assess any risk associated with the use of the Purifier Vertical Clean Bench.
5. Always work with your hands as far back into the Clean Bench as possible. Keep all materials and apparatus inside the lower air foil of the enclosure.
6. Do not work in this Clean Bench without the blower running.
7. Perchloric acid use in this Clean Bench is prohibited.
8. Radioactive materials are prohibited in this Clean Bench. Consult your Safety Officer.
9. Avoid cross drafts and limit traffic in front of the Clean Bench. Air disturbances created may disturb Class 5 conditions.
10. A qualified certification technician should test the Clean Bench before it is initially used. The Clean Bench should be validated annually and whenever it is relocated.
11. The sash must remain in the down position while using the Clean Bench.
12. The HEPA filter provides Class 5 clean air conditions and only provides product protection inside the Clean Bench. **Do not use the Clean Bench for personnel protection**.
13. Never use flammable gases or solvents in the Clean Bench. Use of an open flame must be avoided in the Clean Bench. Open flames may disrupt the airflow patterns in the Clean Bench, burn the HEPA filter and damage the filter's adhesive. Gases under high pressure should not be used in the enclosure as they may disrupt the airflow patterns of the Clean Bench.
14. HEPA filters are only effective for entrapment of particulate matter.

15. The surface of the HEPA filter is fragile and should not be touched. Care must be taken to avoid puncturing the HEPA filter during maintenance. If you suspect that a HEPA filter has been damaged DO NOT use the Clean Bench; contact a local certification agency or Labconco.
16. The HEPA filter in the enclosure will gradually accumulate airborne particulate matter from the room. The rate of accumulation will depend upon the cleanliness of the room air, and the amount of time the Clean Bench is operating. With normal usage, the HEPA filters will last two to five years before requiring replacement.
17. Avoid direct exposure to ultraviolet (UV) radiation; NEVER work in the enclosure when the UV light is on.
18. Ensure that the Clean Bench is connected to an electrical service in accordance with local and national electrical codes. Failure to do so may create a fire or electrical hazard. Do not remove or service any electrical components without first disconnecting the filtered enclosure from electrical service.
19. Increase the downflow velocity by adjusting the speed control of the motorized impeller or change the HEPA filter when the downflow velocity falls below acceptable limits established by your Safety Officer.
20. Ensure only trained operators use the Clean Bench. New users should review the User's Manual and become familiar with the operation of the Clean Bench.
21. Proper operation of the Clean Bench depends largely upon the enclosure location and the operator's work habits. The enclosure should be located away from traffic patterns, doors, fans, ventilation registers, fume hoods, and any other air-handling device that could disrupt its airflow patterns. Consult *Chapter 2: Prerequisites* and *Chapter 3: Getting Started* sections of this manual for further details.

Chapter 5
Appropriate Applications for your Vertical Clean Bench

Now that the installation of your Vertical Clean Bench is completed, you are ready to use it. Read this chapter to learn about:

1. Routine Daily Work Procedures.
2. Suitable Applications.
3. Appropriate HEPA Filter Applications, Suitability and Guidelines.

Routine Daily Work Procedures

Planning

- Arrange for minimal disruptions, such as room traffic or entry into the room while the Clean Bench is in use.

Start-up

- Turn on blower and light. Turn off the UV light, if equipped.
- Only raise the sash for loading and cleaning.
- Allow the Clean Bench blower to operate unobstructed for 1 minute.

- Wear a long sleeved lab coat, rubber gloves and protective eyewear. Wear a protective mask if appropriate. Consult your Safety Officer for additional personal protective equipment recommendations.
- Wipe down interior surfaces with a mild household detergent or disinfectant. DO NOT use abrasive cleaners, bleach or solvents.

Loading Materials and Equipment

- Load only the materials required for the procedure. Do not overload the Clean Bench.
- Do not obstruct the upper air diffuser screen.
- Large objects should not be placed close together.
- After loading, wait one minute to purge airborne contaminants from the work area.

Work Techniques

- Keep all materials inside the lower air foil, and perform all operations as far to the rear of the work area as possible.
- Segregate all clean and contaminated materials in the work area.

Final Purging

- Upon completion of work, the Clean Bench should be allowed to operate for two to three minutes undisturbed, to purge airborne contaminants from the work area before shutting down the blower.
- If equipped, turn on the UV light to decontaminate the work area as determined by your Safety Officer.

Unloading Materials and Equipment

- All open trays, weigh vessels or containers should be covered before being removed from the Clean Bench.

Suitable Applications

Suitable applications for the Purifier Vertical Clean Benches are based on guidelines established by the Institute for Environmental Sciences. Particulates are filtered by the HEPA filter before air is returned to the room. Biohazardous materials or other hazardous solids cannot be used with the Purifier Vertical Clean Bench, as air is directed over the work surface and out of the enclosure. The Purifier Vertical Clean Bench **only provides product protection** and offers no personnel protection whatsoever.

Listed below are suitable applications for HEPA filters.

HEPA Filter Applications, Suitability and Guidelines

- Procedures traditionally performed on an open bench where a clean Class 5 air environment is now required.
- The HEPA filtered enclosure provides product protection from particulate matter. Because air from the Clean Bench enters from the room during operation, this enclosure should only be used for operations requiring sample protection from environmental contamination.
- HEPA filters are only effective for entrapment of particulate matter. The surface of the HEPA filter is fragile and should not be touched. Care must be taken to avoid puncturing the HEPA filter during installation. If you suspect that a HEPA filter has been damaged, DO NOT use the enclosure. See Chapter 6 for Replacing the HEPA Filter.
- The HEPA filter will gradually accumulate airborne particulate matter from the room. The rate of accumulation will depend upon the cleanliness of the room air, and the amount of time the enclosure is operating. With normal usage, the HEPA filters will last two to five years before requiring replacement.

CHAPTER 6
MAINTAINING YOUR VERTICAL CLEAN BENCH

Monitoring airflow and changing the filters are the primary maintenance required. Certification and recertification is also reviewed in Chapter 6.

Review this chapter on maintenance for the following:

1. Routine Maintenance.
2. Determination of when to replace the HEPA filters.
3. How to install a new HEPA filter.
4. HEPA filter leak test.
5. Speed control adjustment and setting the downflow velocity.
6. Operating and calibrating the airflow monitors.
7. Initial certification.
8. Re-certification.
9. Fluorescent light replacement.
10. UV light replacement, if applicable.
11. Motorized impeller replacement.
12. Speed control replacement.

Routine Maintenance Schedule

Weekly

- Wipe down the interior surfaces of the enclosure with a disinfectant or cleaner, depending upon the usage of the unit and allow to dry.
- Using a damp cloth, clean the exterior surfaces of the enclosure, particularly the front and top to remove any accumulated dust.
- Operate the exhaust system, noting the airflow velocity out the front of the enclosure using a source of visible smoke. Airflow monitors are recommended for constant monitoring.

Monthly (or more often as required)

- Determine the actual downflow velocity 6" below the upper diffuser of the enclosure where the average reading should be at the specified velocity. (Use calibrated thermal anemometer or other approved apparatus). Airflow alarms are recommended for constant monitoring.
- All weekly activities.

- Check downflow velocity. Increase speed control or change HEPA filter when downflow velocity of the enclosure drops below the recommended speed for your facility or if the airflow alarm monitor alerts you. Airflow monitors are recommended.

Annually

- Replace UV lamps if equipped.
- Have the enclosure validated by a qualified certification technician. See Certification and Recertification to follow in *Chapter 6*.
- All monthly activities.
- Change prefilter.

When to Replace HEPA Filters

The HEPA filter in the Purifier Vertical Clean Bench gradually accumulates airborne particulate matter from the room. The rate of accumulation will depend upon the cleanliness of the room air, and the amount of operational time the enclosure is operating. In typical

installations and usage, the HEPA filters will last two to five years before requiring replacement. Replace HEPA filters when downflow velocity drops below the recommended 30-65 fpm velocity and the speed control is adjusted to full speed. Replace HEPA filter if it fails the HEPA Filter Leak Test in Chapter 6.

How to Install a New HEPA Filter

NOTE: Only a qualified certifier should service the HEPA filter. After the HEPA filter is replaced, the enclosure MUST be certified. See Figure 6-1.

1. Unplug the enclosure and remove the prefilter located on top.
2. Remove the front panel by loosening the two screws that secure it.
3. Using a 9/16" deep socket, loosen the filter clamp bolts located on top. Refer to Figure 6-1.
4. With the clamp bolts loosened, the HEPA filter-clamping frame should be clear of filter. Carefully pull the filter straight out of the enclosure and discard properly.
5. Cover the surface of the new HEPA filter gasket with a light coating of silicone grease, if desired.
6. Install the new HEPA filter by pushing it straight into the Vertical Clean Bench, ensuring that it is correctly oriented with the gasket facing down on the exhaust side of the enclosure.

CAUTION: The filter clamp bolts should only be tightened enough to ensure a proper seal at maximum tightness. The filter gasket should be compressed 50% or less.

7. Tighten the clamp bolts uniformly until the filter gasket is properly compressed against the frame. Inspect the seal thoroughly before proceeding.
8. Reinstall the front panel and prefilter.
9. Plug the Vertical Clean Bench in and have it checked for leaks and downflow velocity.

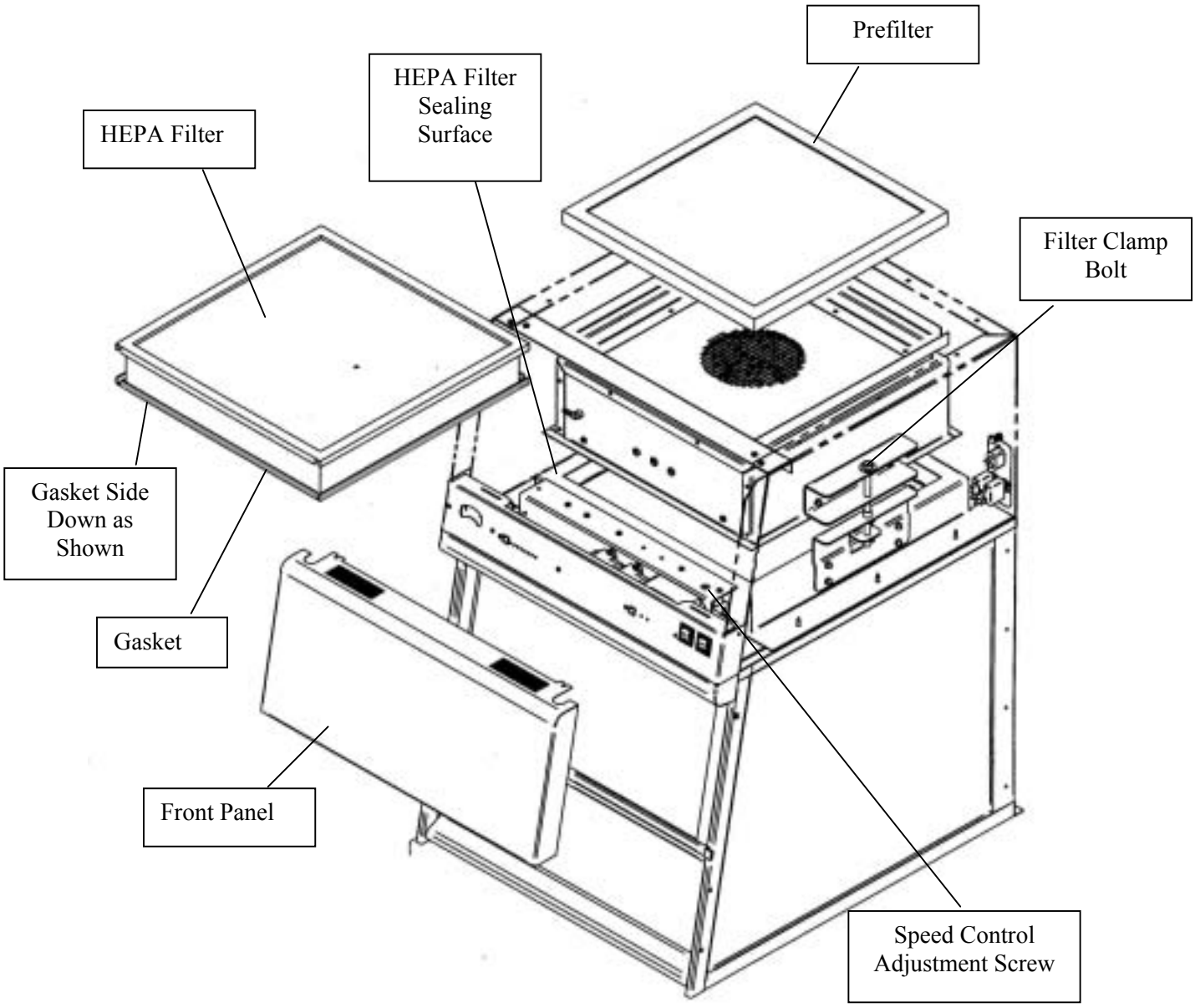

Figure 6-1
HEPA Filter Changing Diagram & Filter Leak Test Diagram

HEPA

HEPA Filter Leak Test

Purpose

After installing the new HEPA filter, the HEPA filter should be leak checked. This test is performed to determine the integrity of the HEPA filter, the filter housing, and the filter seal. Leak testing must be done by a qualified technician with calibrated equipment. Remove the upper perforated diffuser located inside the enclosure by using a Phillips screwdriver to unfasten the screws. (See Figure 6-1). The filter passes the leak test at .01% or better. Reference Leak Testing and Photometer scanning from the Institute of Environmental Services (IES-RP-CC001.3)

Apparatus

1. **An aerosol photometer ATI model 2D, 2E, 2G or equivalent**. Air Techniques Hamilton Associates Inc., 11403 Cron Ridge Dr., Owings Mills, MD 21117
2. **One aerosol generator of the Laskin nozzle(s) type**. An aerosol of mineral oil or suitable liquid shall be created by flowing air through it. The compressed air supplied to the generator should be adjusted to a pressure of 10± 1 psig. during operation. Air Techniques Inc. Model TDA-4A or equal. One nozzle at 10 psig is (67.5 cfm x 100ug/l)/(Vol. of air), For the 2' at 55 fpm or 230 cfm, one nozzle @10 psig is 6750/230 cfm = 30 ug/l. For the 3' at 55 fpm or 340 cfm, one nozzle @ 10 psig is 20 ug/l. For the 4' at 55 fpm or 460 cfm, one nozzle at 10 psig is 15 ug/l.
3. **Mineral oil** (Catalog #1491400).
4. **Sampling Nozzle, Rectangular** 1/2" x 3-1/4", Air Techniques, Inc.

Procedure

For the ATI 2G Photometer

1. Turn on the photometer and allow it to operate for a minimum of 5 minutes. Leave the valve in the “CLEAR” setting.
2. Press the “ENTER” keypad. Press the “REF” keypad.
3. The display will display “P1” for approximately 1 second, and then display a numerical value.

4. Using the "^" or "v" keypads, respectively, increase or decrease the numerical value until it equals 30 (2'), 20 (3'). 15 (4') for the Purifier Vertical Clean Bench enclosure at 55 fpm downflow velocity.
5. Press the "ENTER" Keypad. The photometer will scan for 15 seconds, and then the "0" keypad will flash. Press the "Enter" keypad. The unit will scan for 5 seconds, the display will read "0000," and the unit will sound a confirming tone.
6. Set the valve to "DOWNSTREAM." Place the palm of your hand over the sampling port of the pistol. There should be a strong vacuum at this port. If the vacuum is weak, contact Air Techniques Hamilton Associates.
7. Turn the enclosure on and let it operate for a minimum of 5 minutes.
8. If necessary, adjust the speed control of the enclosure to maintain the following downflow airflows at 55 fpm; 2' (230cfm), 3' (340 cfm), 4' (460 cfm.)
9. Position the aerosol generator discharge in the intake of the prefilter on top of the enclosure.
10. Start the aerosol generator (Pressure to be 10 +/- 1 PSIG). Ensure that one Laskin nozzle is in the "open" position.
11. Allow the generator to operate for a minimum of 15 seconds. Scan the downstream exhaust side of the HEPA filter by passing the sampling nozzle of the gun in slightly overlapping strokes over the entire surface the filter, with the sampling port not more than 1 inch from the surface of the filter media. Scan the entire periphery of the filter and the gasket between the filter frame and the enclosure frame. Scanning shall be done at a traverse rate of not more than 2 inches per second.

Acceptance

Aerosol penetration shall not exceed 0.01 percent measured by the photometer.

Setting the Downflow Velocity with the Speed Control Adjustment

1. Remove the front panel by loosening the (2) Phillips screws on top that secure the front panel.
2. The speed control is located on the electrical subassembly located behind the switched control panel and below the front panel. See Figure 6-1.
3. Adjust the speed control with a small Phillips screwdriver by turning the screw counterclockwise to increase blower speed or clockwise to decrease the blower speed. The speed control is very sensitive, so proceed with caution.
4. Measure the downflow velocity per the averaging technique outlined in Chapter 3 and adjust the speed control slowly for the desired speed. Allow the speed to stabilize and re-measure the downflow velocity to confirm.
5. Replace the front panel and tighten the screws.

Calibrate and Operate the Airflow Monitor

Options

Optional Guardian Airflow Monitor
Refer to Figure 6-2 for operation and calibration.

Labconco Airflow Monitor / Airflow Switch Operation
The Guardian Airflow Monitor consists of a circuit board and an airflow switch. This switch indicates airflow as safe or low. It does not provide an actual velocity, but a small setscrew in the back of the sensor can adjust the airflow level that it classifies as “good/safe” or “low/alert.”

The circuit board provides power to the sensor and also contains a “safe (green)” and “alert (red)” airflow LED indicators, as well as a “SILENCE ALARM” button to quiet the audio alarm. When first powered up, the Printed Circuit Board (PCB) will light both red and green LED indicators and sound the alarm to indicate it is working. After 5 seconds, the air monitor will indicate either good or bad airflow based on what the connected airflow switch detects. For low airflow, the unit will wait for 10 seconds after low indications before it sounds both the audio alarm and the red “alert” LED indicator. If

the "SILENCE ALARM" button is pressed, the audio alarm will be silenced, but the red "alert" LED will remain on. The alarm is silenced indefinitely unless an airflow change is detected. If safe airflow is later detected for 10 seconds, the green "safe" LED will be lit and the "alert" (red) LED will be shut off. At any time the airflow is safe/good, one can press the SILENCE ALARM test button and the audio alarm and the red LED will turn on as long as this button is held down. The PCB has also a two-pin connector for use as an external output with isolated relay contacts that close when the red/alert LED is lit (low airflow). These relay contacts are not affected by the "SILENCE ALARM" button.

The PCB is mounted behind the front panel using standoffs and an appropriate label is used to highlight the "SILENCE ALARM" button with clear areas for the red and green LED's.

By special order, the PCB can be prepared as a factory special with an additional connector for the following external inputs, and having the following possible functions:

- External Alarm allows an external signal to sound the alarm from the building airflow system of a failed condition.
- Alarm Disable allows an external signal to prevent a "low" airflow alarm from occurring.
- Night Setback allows an external signal to prevent a "low" airflow alarm from occurring (not any different from Alarm Disable above other than the terminology.)
- Contact Labconco for ordering information on this special PCB.

Calibration

1. Ensure the flow switch and alarm circuit board are installed and operational.
2. Allow the enclosure to operate for at least two minutes.
3. If factory installed, the monitor will alarm at 30±10 fpm downflow velocity with the average outflow velocity set at 85±10 fpm.
4. To change the factory setting, set the downflow velocity to the desired alarm condition using the speed control adjustment procedure outlined in Chapter 6. Once the alarm condition is set, use a small screwdriver to turn the adjustment screw on the airflow switch counterclockwise (facing the screw) until the "low" airflow red LED lights and the audible flow alarm sounds.
5. Adjust the downflow velocity to the nominal operating point required. The green "safe" LED should light.

6. Over time the HEPA filter will load and eventually slow the downflow velocity. Once the alarm condition is met, simply increase the speed control as outlined in Chapter 6 or replace the HEPA filter if the speed control is maximized.
7. The table below lists typical alarm conditions based on normal operating conditions. Typical alarm conditions are set at downflow velocities of 10 to 30 feet per minute below the normal operating conditions due to supply air and exhaust air fluctuations, as well as room air cross drafts. Consult your Safety Officer or Laboratory Manager for proper operating speeds.

Enclosure Operating Downflow Speed	**Alarm Condition Set Point Speed**
55 ± 10 fpm	25-35 fpm
45 ± 10 fpm	25-35 fpm

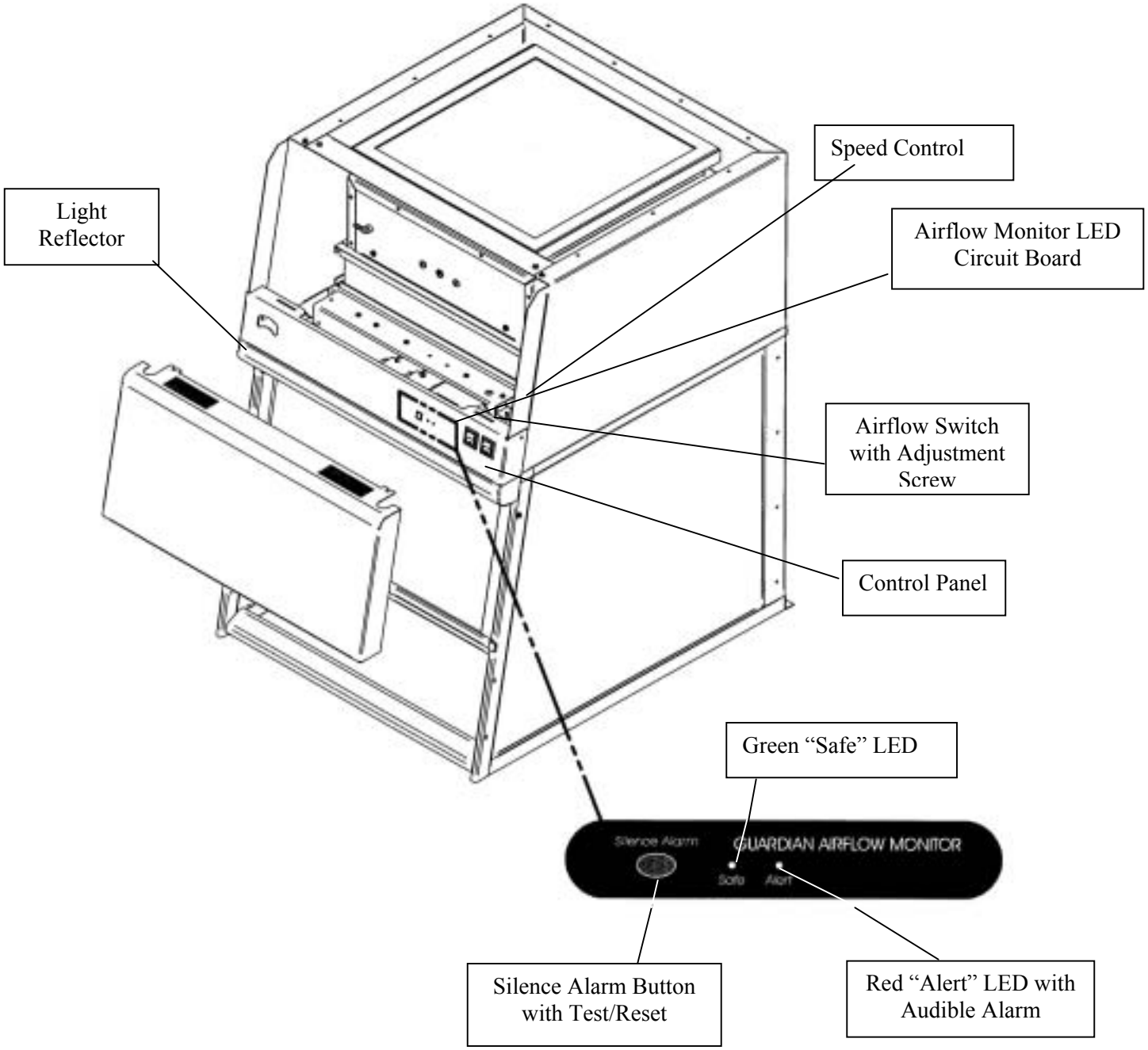

Figure 6-2
Guardian Airflow Monitor with Airflow Switch

Initial Certification

The Purifier Vertical Clean Bench has been certified at the factory for an average downflow velocity of 55±10 fpm along with the HEPA Filter Leak Test. The Purifier Vertical Clean Bench should be certified for the proper downflow velocity required by your Safety Officer. It is also a conservative recommendation to perform the HEPA Filter Leak Test again should there be any damage caused during transport.

Re-Certification

Under normal operating conditions, the Purifier Vertical Clean Bench should be recertified at least annually. The certifier should perform the minimum following tests:

- Downflow Velocity Test
- HEPA Filter Leak Test

In addition, the following tests should also be performed at the user's discretion:

- Measure of Line Voltage and Current
- Smoke Test to determine proper airflow patterns
- Lighting Intensity Test (when appropriate)
- Noise Level Test (when appropriate)
- Vibration Test (when appropriate)

Fluorescent Light Replacement

1. Disconnect the power.
2. Locate the small light reflector located under the control panel.
3. Remove the light reflector by removing two Phillips screws on the bottom of the light reflector.
4. Rotate and remove the old fluorescent lamp.
5. Reinstall the new fluorescent lamp and light reflector in reverse order.
6. Power the unit up and try the new fluorescent lamp.

UV Light Replacement (if equipped)

1. Disconnect the power.
2. Locate the UV lamp located inside the enclosure.
3. Rotate and remove the old UV lamp.
4. Reinstall the new UV lamp.
5. Power the unit up and try the new UV lamp.

Motorized Impeller Replacement

The motorized impeller must be replaced as a complete unit. When the motorized impeller is replaced, the capacitor should also be replaced. See Appendix A for Replacement Parts Diagram. See Figure 6-3 for an isometric view of the motorized impeller plenum assembly. The HEPA filter rests below the motorized impeller assembly.

1. Unplug the enclosure from the electrical outlet.
2. Remove HEPA filter per the HEPA filter removal procedure outlined earlier in this chapter.
3. Consult the wiring diagram in Appendix C of the manual and disconnect all the wires of the motorized impeller. Be sure to connect wires on the new motor in the same way the old motor was wired. The 3' and 4' enclosures have two motorized impellers.
4. Remove four screws in each motorized impeller.

   ! **WARNING: High-speed blower. Never operate impeller with housing off.**

5. Replace each capacitor with a new one of equal voltage and capacity.
6. Reassemble each new motorized impeller by reversing the assembly steps.
7. Perform a HEPA filter leak check.

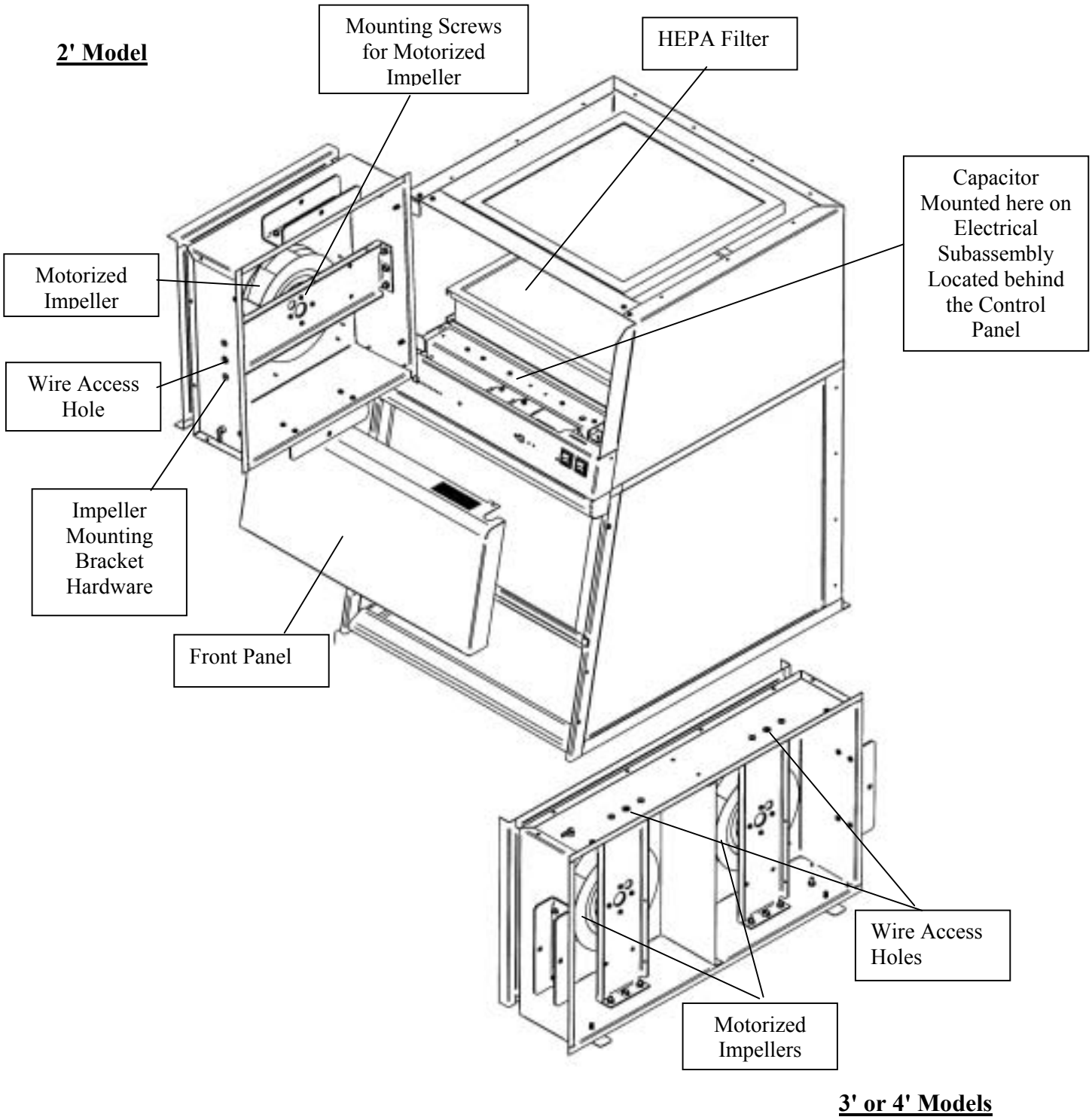

Figure 6-3
Motorized Impeller Replacement

Speed Control Replacement

1. Remove the bracket that the speed control is attached to. See Figures 6-1, and 6-2.
2. Remove the two screws holding the speed control using a Phillips screwdriver. Refer to Appendix A for Replacement Parts Diagram.
3. Disconnect all wires leading to the speed control. Connect wires on new speed control in the same position as the old speed control.
4. Reassemble to the system in the same position and with the same screws that were removed earlier.

CHAPTER 7 ACCESSORIZING AND MODIFYING YOUR VERTICAL CLEAN BENCH

There are several ways to accessorize and modify the Vertical Clean Bench for your individual requirements. These include the addition of accessory work surfaces, airflow monitors, filters, and storage cabinets or stands.

1. **Work Surfaces**

An optional dished work surface is available to attach to the Vertical Clean Bench.

Dished work surfaces are contoured to fit the dimensions of the filtered enclosures to contain spills. Epoxy is chemical resistant. See Figure 3-1 for installation.

Catalog #	Description	Dimensions (W x D x H)
3909900	Black, 2-foot wide	24" x 29" x 1"
3909901	Black, 3-foot wide	36" x 29" x 1"
3909902	Black, 4-foot wide	48" x 29" x 1"
3909903	Gray, 2-foot wide	24" x 29" x 1"
3909904	Gray, 3-foot wide	36" x 29" x 1"
3909905	Gray, 4-foot wide	48" x 29" x 1"

2. Guardian™ Airflow Monitor

The Guardian Airflow Monitor allows you to continuously monitor airflow through the Clean Bench. The Guardian monitor can be placed on any Purifier Vertical Clean Bench.

Description	Order Part #'s	Individual Parts Required
Guardian Airflow Monitor 115V or 230V		
1 ea.	3811500	Airflow Monitor Printed Circuit Board
1 ea.	3910700	Airflow Sensor w/ Connector
2 ea.	1885405	#6-32 x .31" Phillips machine screw to mount Airflow Monitor Circuit Board
2 ea.	1891808	#6-32 x .50" Phillips thread cutting screw to mount Airflow Sensor
1 ea.	3935501	Upper Diffuser w/ Air cutout 2'
1 ea.	3935503	Upper Diffuser w/ Air cutout 3'
1 ea.	3935505	Upper Diffuser w/ Air cutout 4'

3. Accessory Filters

HEPA Filter

HEPA Filter is 99.99% efficient on particles 0.3 micron.

Width	Catalog #	Size
2'	3707900	18" x 18" x 3.31"
3'	3707901	30" x 18" x 3.31"
4'	3707902	42" x 18" x 3.31"

Prefilters (Roughing)

A roughing prefilter to extend HEPA filter life.

Filter	Catalog #	Qty.
2'	3935700	1
3'	3935701	1
4'	3935702	1

4. Storage Cabinets and Stands

	SOLVENT			ACID		
Size/Description	Dual Doors	Right Hinge	Left Hinge	Dual Doors	Right Hinge	Left Hinge
48"	9902000	-	-	9901000	-	-
36"	9902100	-	-	9901100	-	-
30"	9902200	-	-	9901200	-	-
24"	-	9902300	9902400	-	9901300	9901500
18"	-	-	-	-	9901400	9901600
12"	-	-	-	-	-	-
48" w/Self-Closing Doors	9903000	-	-	-	-	-
36" w/Self-Closing Doors	9903100	-	-	-	-	-
30" w/Self-Closing Doors	9903200	-	-	-	-	-
24" w/Self-Closing Doors	-	9903300	9903400	-	-	-
24" ADA	-	9906000	9906100	-	9905000	9905200
24" ADA w/Self-Closing Doors	-	9906200	9906300	-	-	-
18" ADA	-	-	-	-	9905100	9905300
12" ADA	-	-	-	-	-	-

	STANDARD BASE			VACUUM PUMP		
Size/Description	Dual Doors	Right Hinge	Left Hinge	Dual Doors	Right Hinge	Left Hinge
48"	9900000	-	-	-	-	-
36"	9900100	-	-	-	-	-
30"	9900200	-	-	-	-	-
24"	-	9900300	9900600	-	-	-
18"	-	9900400	9900700	-	9907000	9907100
12"	-	9900500	9900800	-	-	-
48" w/Self-Closing Doors	-	-	-	-	-	-
36" w/Self-Closing Doors	-	-	-	-	-	-
30" w/Self-Closing Doors	-	-	-	-	-	-
24" w/Self-Closing Doors	-	-	-	-	-	-
24" ADA	-	9904000	9904300	-	-	-
24" ADA w/Self-Closing Doors	-	-	-	-	-	-
18" ADA	-	9904100	9904400	-	-	-
12" ADA	-	9904200	9904500	-	-	-

Base Stands

3747000	2'	Telescoping Base Stand with Fixed Feet	24" w x 25.5" d x 27. 5" to 33.5" h
3746701	3'	Telescoping Base Stand with Fixed Feet	36" w x 29.25" d x 27.5" to 33.5" h
3746702	4'	Telescoping Base Stand with Fixed Feet	48" w x 29.25" d x 27.5" to 33.5" h
3747010	2'	Telescoping Base Stand with 5" Casters	24" w x 25.5" d x 27. 5" to 33.5" h
3746711	3'	Telescoping Base Stand with 5" Casters	36" w x 29.25" d x 27.5" to 33.5" h
3746712	4'	Telescoping Base Stand with 5" Casters	48" w x 29.25" d x 27.5" to 33.5" h

5. IV Bar Kits
   For pharmacy applications, IV Bar Kits support intravenous bottles and bags.

3721000	2' IV Bar Kit
3721001	3' IV Bar Kit
3721002	4' IV Bar Kit

CHAPTER 8 TROUBLESHOOTING AND SERVICER OPERATING LOG

Refer to the following table if your Vertical Clean Bench fails to operate properly. If the suggested corrective actions do not solve your problem, contact Labconco for additional assistance.

PROBLEM	CAUSE	CORRECTIVE ACTION
Class 5 air conditions are not present inside the enclosure.	Improper user techniques for the enclosure.	See "Certifying the Enclosure" Chapter 3 and "Safety Precautions" Chapter 4 sections in the manual. (Ref. Appendix D).
	External factors are disrupting the enclosure airflow patterns.	See "Location Requirements" Chapter 2, "Certifying the Enclosure" Chapter 3, and "Safety Precautions" Chapter 4 sections of this manual. (Ref. Appendix D).
	Enclosure has improper downflow velocity.	Have enclosure certified and check exhaust system. Check HEPA filters for loading. Adjust enclosure speed control. Enclosure should have an average downflow velocity of 30-65 fpm.

PROBLEM	CAUSE	CORRECTIVE ACTION
Blower won't operate.	Unit not plugged into outlet.	Plug the enclosure into appropriate electrical service.
	Circuit breaker(s) or ground fault Interrupter.	Reset circuit breaker.
	Blower wiring is disconnected.	Inspect blower wiring.
	Blower switch is defective.	Replace switch.
	Motorized impeller or blower is defective.	Replace motorized impeller or blower. See Chapter 6.
Poor internal Class 5 air conditions	Enclosure sash not closed.	Close sash.
	HEPA filter clogged.	Replace HEPA filter or increase speed.
Blower and lights won't operate.	Unit not plugged into outlet.	Plug enclosure into appropriate electrical service.
Lights do not work.	Circuit breaker(s) tripped.	Reset or replace circuit breaker.
	Lamp not installed properly.	Inspect lamp installation.
	Lamp wiring disconnected.	Inspect lamp wiring.
	Defective lamp.	Replace lamp.
	Light switch is defective.	Replace light switch.
	Defective electronic ballast.	Replace ballast.
Airflow monitor malfunction.	No power. No lights. No display.	Power cable to circuit board is disconnected and needs to be connected. Sensor cable needs to be connected. Verify that all airflow monitor interface cables are connected. Check fuses on enclosure.
	No audible alarm.	Alarm has been temporarily silenced using "SILENCE ALARM."

PROBLEM	CAUSE	CORRECTIVE ACTION
Airflow Monitor Malfunction (Continued)	Wrong alarm set point.	Airflow monitor was not properly adjusted. Repeat calibration steps outlined in this manual in Chapter 6.
	Constant audible alarm.	Check airflow and calibration of airflow monitor. See Chapter 6.
	Continuous alarm.	Check the downflow velocity of the enclosure as the airflow of the system may have changed. If incorrect, adjust the speed control to increase downflow velocity. The HEPA filter may have become loaded. If downflow velocity is correct, calibrate the airflow monitor outlined in this manual in Chapter 6.
	Monitor alarms; air way to airflow monitor sensor is blocked by insects, dust or debris.	Lightly clean the airway with clean air. Be careful not to touch sensitive electrical components.
	Audible disable will not stay operational.	An alarm condition must be continuously present before the audible alarm can be silenced. If flow conditions fluctuate near the alarm set point, the airflow monitor will automatically reset it. Action should be taken to bring the enclosure airflow into proper operating parameters or adjust the alarm set point lower.

Service Operating Record Log

Customer Name _____ Model Number _____

Date Installed _____ Serial Number _____

Unit Location _____

Date	Comments

Appendix A
Vertical Clean Bench Components And Replacement Parts

The components that are available for your Vertical Clean Bench are listed. The parts shown are the most commonly requested. If other parts are required, please contact Product Service.

Item	Qty.	Part Number	Description
1	1	3911000	Glass, Side
2A	1	3911900	Glass, Sash 2'
2B	1	3911901	Glass, Sash 3'
2C	1	3911902	Glass, Sash 4'
3A	1	3938900	Sash Assembly, 2'
3B	1	3938901	Sash Assembly, 3'
3C	1	3938902	Sash Assembly, 4'
4A	1	3905600	Lower Air Foil, 2'
4B	1	3905601	Lower Air Foil, 3'
4C	1	3905602	Lower Air Foil, 4'
5A	1	3907400	Bracket, Air Foil R.H.
5B	1	3907401	Bracket, Air Foil L.H.
6	2	1554500	Stop, Sash Bumper.
7A	1	6916500	Latch, Sash
7B	1	3906700	Bracket, Latch
7C	1	1927403	Spring, Compression Latch
7D	2	1893206	Screw, 8-32 x .38" Lg. Phillips Pan S.S. Type F
9A	2	1889316	Screw, 10-24 x 1.00 PH Phil S.S.
9B	2	1912108	Washer, Plastic .194 ID. x .380 OD
9C	2	7868402	Bushing, Spacer .31 x .63
10	1.9 Ft	6913700	Wiper, Sash Seal
11A	2	1936800	Bushing, Heyco closed 1.50 Dia.
11B	2	1934601	Bushing, Heyco w/ Flex Shutter 1.50 Dia.
12A	2	3940500	Hinge, outer
12B	2	3940501	Hinge, Inner
12C	4	1591606	Rubber Bumper
12D	2	3939600	2' and 4' Sash Closure Door
12E	2	3939601	3' Sash Closure Door
12F	2	3940700	Extension Bi-Fold Door 3'
12G	2	3940701	Extension, Bi-Fold Door 4'
13A	1	3907700	Reflector, Light 2'
13B	1	3907701	Reflector, Light 3'
13C	1	3907702	Reflector, Light 4'
13D	2	1889308	Screw, Mach. 10-24 x .50 PH Phillips
14A	1	3708300	Lamp, Fluorescent 2' Enclosure (F15T8-SP35)
14B	1	9721902	Lamp, Fluorescent 3' Enclosure (F17T8)
14C	1	9721901	Lamp, Fluorescent 4' Enclosure (F25T8)
15A	1	1270100	Lamp, UV 2' or 3' Enclosure (G15T8)
15B	1	1271300	Lamp, UV 4' enclosure (G30T8)
16A	1	3911700	Bracket, Right Reflector Support
16B	1	3911701	Bracket, Left Reflector Support
16C	4	1893108	Screw, #8 x 1/2 AB Hex Washer Head

Item	Qty.	Part Number	Description
17A	1	3937900	Wiring Harness Main, 115V, 2'
17B	1	3937901	Wiring Harness Main, 230V, 2'
17C	1	3938000	Wiring Harness, 115V, 3' and 4'
17D	1	3938001	Wiring Harness, 230V, 3' and 4'
18A	1	3811500	Guardian Airflow Monitor Printed Circuit Board
18B	2	1885405	Screw Mach #6-32 x .31 PH Phil. S.S.
19	1	3936700	Label, Front Set
20A	1	3910700	Airflow Switch
20B	2	1891808	Screw, Thread Cutting #6-32 x .50 PH
22A	1	1307000	Switch, Rocker (2 position) - Blower
22B	1	1306300	Switch, Rocker (3 position) – UV Light Only
23A	1	3904800	Front Panel, 2'
23B	1	3904801	Front Panel, 3'
23C	1	3904802	Front Panel, 4'
23D	1	4472400	Screw, Thread cut 10-24 x .50 Type F PH Phillips
24A	1 or 2	3934500	Impeller, Motorized 2' or 3' Enclosure, 115V
24B	1 or 2	3934501	Impeller, Motorized 2' or 3' Enclosure, 230V
24C	2	3934600	Impeller, Motorized 4', 115V
24D	2	3934601	Impeller, Motorized 4', 230V
25A	1	1306900	Capacitor, 2', 115V 10 MFD
25B	2	1306900	Capacitor, 3', 115V 10 MFD
25C	2	1306600	Capacitor, 4', 115V 15 MFD
25D	2	1306800	Capacitor, 2', 230V 4 MFD (effective 2MFD)
25E	4	1306800	Capacitor, 3', 230V 4 MFD (effective 2MFD)
25F	2	1306800	Capacitor, 4', 230V 4 MFD
26A	1	1235400	Ballast, Fluorescent 2', 115V
26B	1	1235500	Ballast, Fluorescent 2', 230V
26C	1	1294000	Ballast, Fluorescent 3' or 4', 115V or 230V
27A	1	1235400	Ballast, UV 2' or 3', 115V
27B	1	1235500	Ballast, UV 2' or 3', 230V
27C	1	1233400	Ballast, UV 4', 115V
27D	1	1233600	Ballast, UV 4', 230V
28A	1	3922100	Speed Control, 115V
28B	1	3922101	Speed Control, 230V
29A	1	3935500	Upper Diffuser Screen 2' (Internal)
29B	1	3935502	Upper Diffuser Screen 3' (Internal)
29C	1	3935504	Upper Diffuser Screen 4' (Internal)
29D	1	3935501	Upper Diffuser w/ Air cutout 2'
29E	1	3935503	Upper Diffuser w/ Air cutout 3'
29F	1	3935505	Upper Diffuser w/ Air cutout 4'

Item	Qty.	Part Number	Description
30	10	1893712	Screw, #10 x .75 PH Phil. Thd. Forming
31A	2	1881196	Capscrew, 3/8 –16 x 6.0 Lg. Hx. Hd.
31B	4	1911018	Washer, Flat 3/8
31C	2	1906925	Nut, Hex 3/8 Nylon Lock
32A	1	3707900	HEPA Filter (2') 18 x 18 x 3.32 w/ Gasket
32B	1	3707901	HEPA Filter (3') 30 x 18 x 3.32 w/ Gasket
32C	1	3707902	HEPA Filter (4') 42 x 18 x 3.32 w/ Gasket
35A	1	1333800	IEC Power Inlet, 115V
35B	1	1305800	Power Cord, 115V, Right Angle
35C	1	1305900	Power Cord, 230V, Right Angle
35D	1	1339200	Receptacle, RFI Inlet 230V
36A	1 - (115V)	1327204	Circuit Breaker, 5 AMP
36B	2 - (230V)	1327200	Circuit Breaker, 3 AMP
40A	1	1952500	Gauge, Pressure Mini Helic II
40B	1	3667400	Bracket, Gauge
40C	2	1905617	Nut, #10-24 KEPS
40D	2	1551700	Tubing, 3/16" ID x 5/16" OD, PBC 7.00" Lg.
40E	2, 1" Long	3788200	Snubber, Filter Pressure Gauge

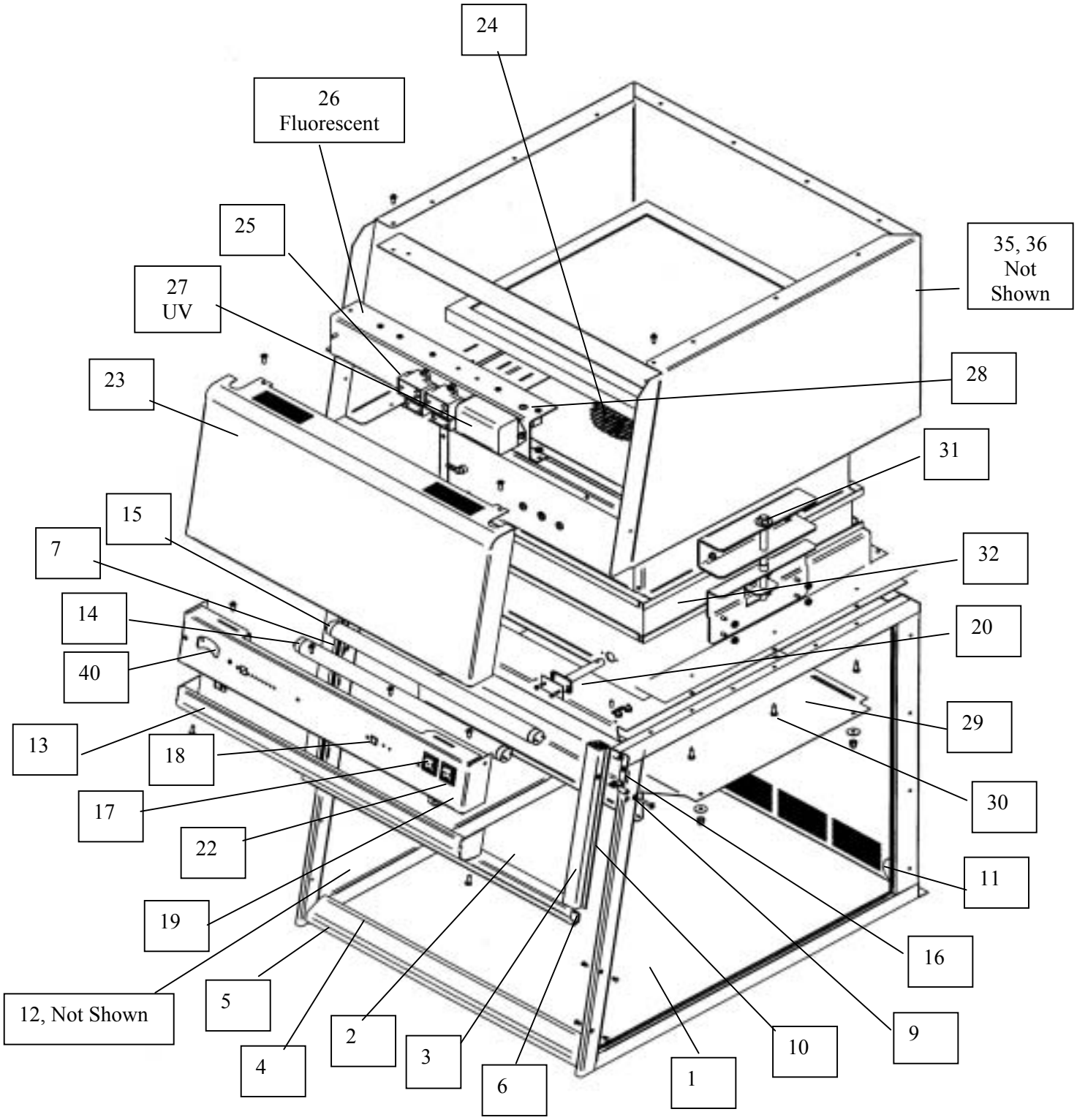

Figure A-1
Replacement Parts, Purifier Vertical Clean Benches

APPENDIX B
DIMENSIONS

See the following dimensions for the Purifier Vertical Clean Benches.

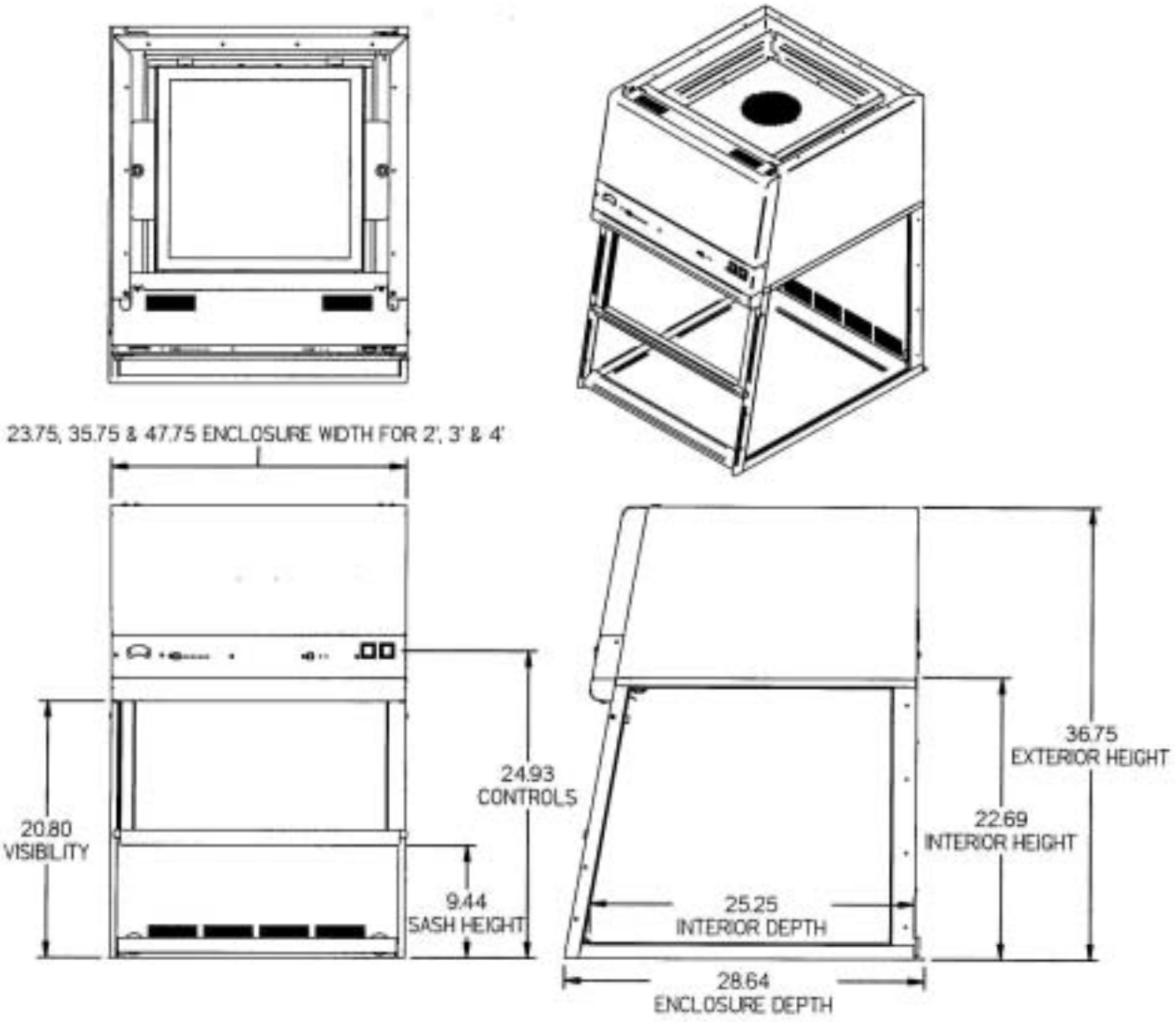

Figure B-1
Purifier Vertical Clean Bench

APPENDIX C VERTICAL CLEAN BENCH SPECIFICATIONS

This Appendix contains technical information about all the Purifier Vertical Clean Benches including electrical specifications, environmental operating conditions and wiring diagrams.

- 5 Amps, 115V, 60 Hz or 3 Amps, 230V, 50/60 Hz, Purifier Vertical Clean Bench.

Environmental Conditions

- Indoor use only.
- Maximum altitude: 6562 feet (2000 meters).
- Ambient temperature range: 41° to 104°F (5° to 40°C).
- Maximum relative humidity: 80% for temperatures up to 88°F (31°C), decreasing linearly to 50% relative humidity at 104°F (40°C).
- Main supply voltage fluctuations not to exceed ±10% of the nominal voltage.
- Transient over-voltages according to Installation Categories II (Over-voltage Categories per IEC 1010). Temporary voltage spikes on the AC input line that may be as high as 1500V for 115V models and 2500V for 230V models are allowed.
- Used in an environment of Pollution degrees 2 (i.e., where normally only non-conductive atmospheres are present). Occasionally, however, a temporary conductivity caused by condensation must be expected, in accordance with IEC 664.

C-1

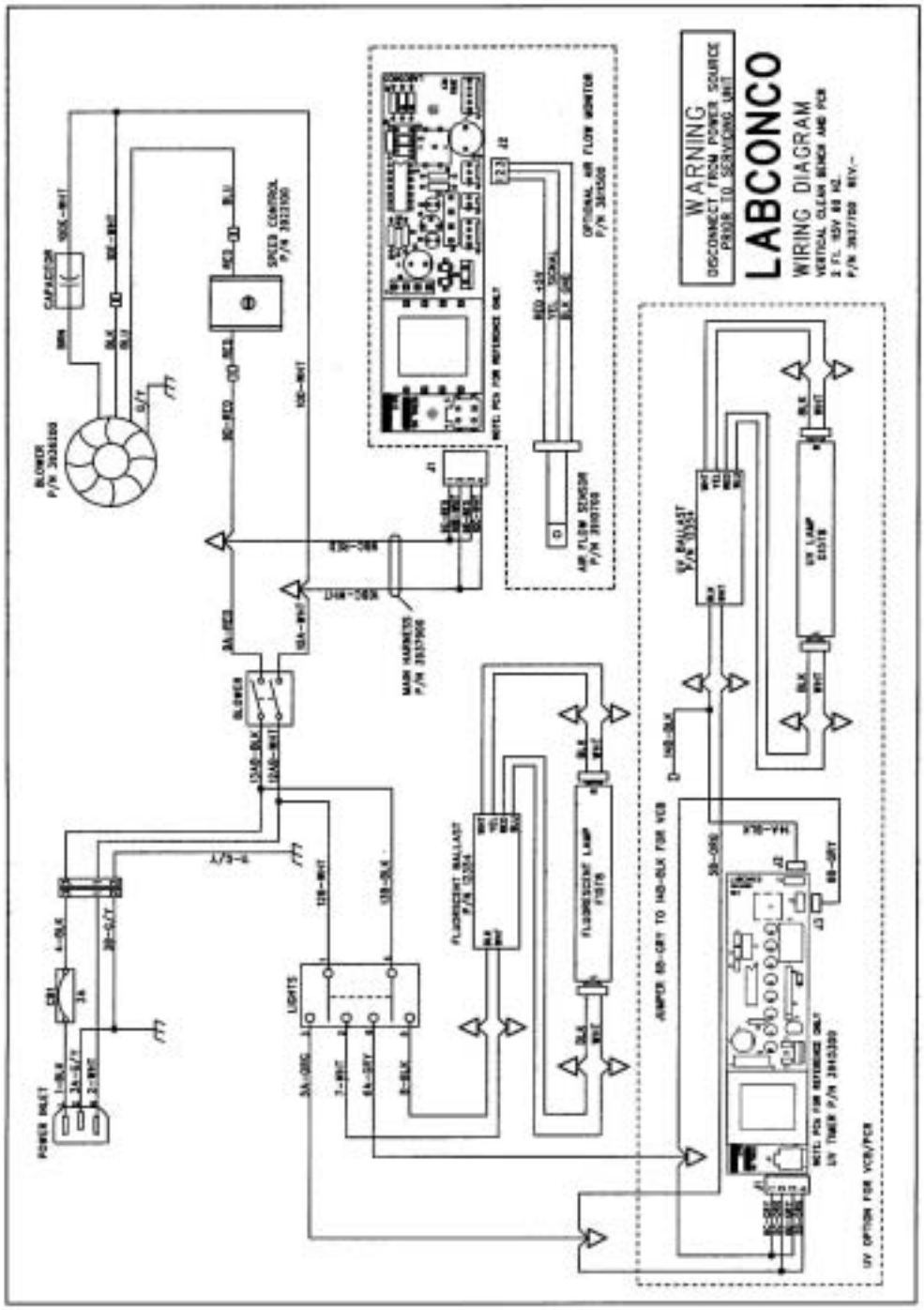
WARNING
DISCONNECT FROM POWER SOURCE PRIOR TO SERVICING UNIT
LABCONCO
WIRING DIAGRAM
VERTICAL CLEAN BENCH AND PCB
BLOWER
CAPACITOR
SPEED CONTROL
OPTIONAL AIR FLOW MONITOR
AIR FLOW SENSOR
MAIN HARNESS
BLOWER
POWER INLET
LIGHTS
FLUORESCENT BALLAST
FLUORESCENT LAMP
UV BALLAST
UV LAMP
JUMPER BO-GRY TO 140-BLK FOR VCB
UV OPTION FOR VCB/PCB

C-2

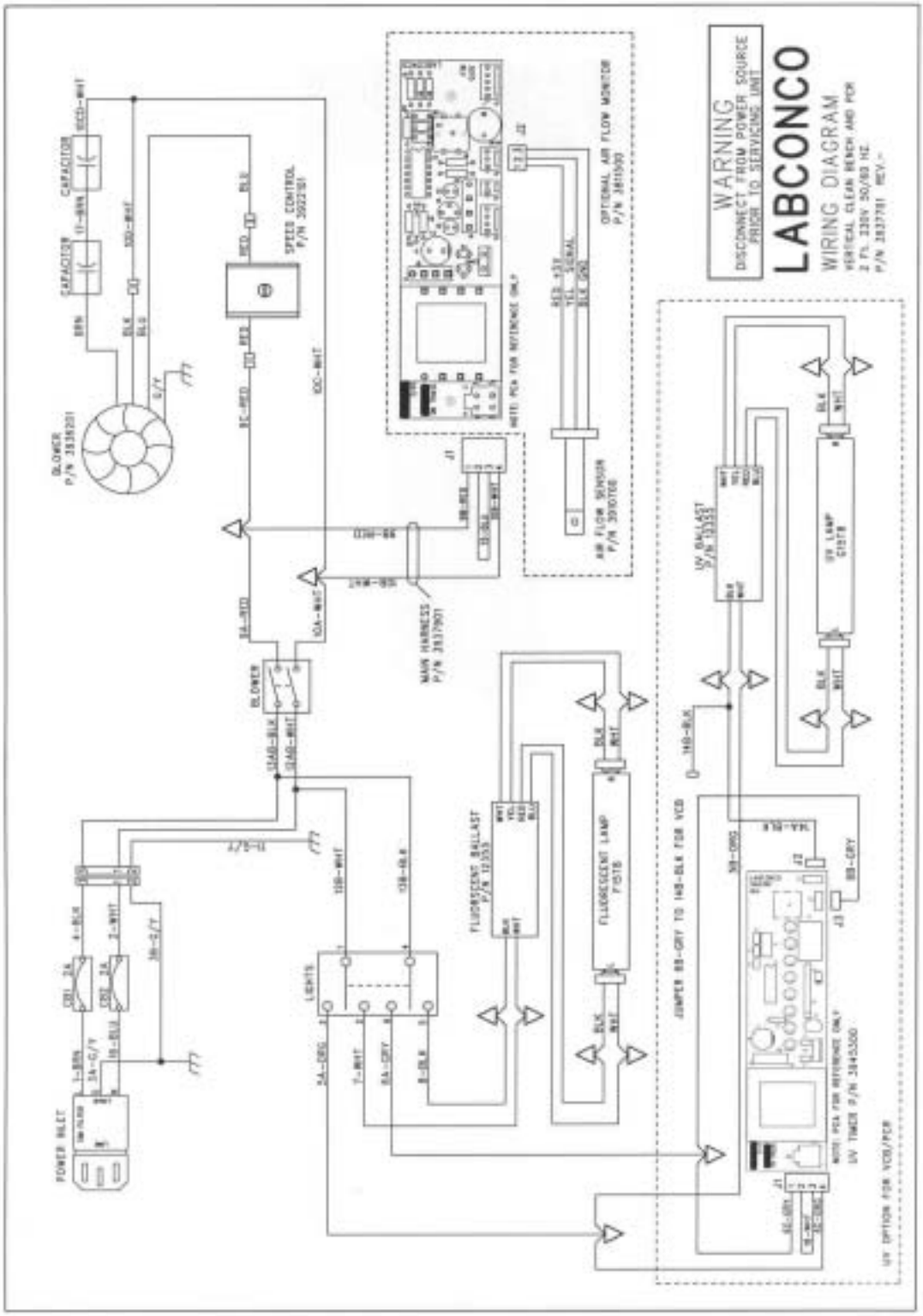
WARNING
DISCONNECT FROM POWER SOURCE PRIOR TO SERVICING UNIT
LABCONCO
WIRING DIAGRAM
VERTICAL CLEAN BENCH AND PCR
2 FT. 230V 50/60 HZ
P/N 3837701 REV.-
BLOWER P/N 3935201
CAPACITOR
CAPACITOR
SPEED CONTROL P/N 3922151
OPTIONAL AIR FLOW MONITOR P/N 3811000
NOTE: PCA FOR REFERENCE ONLY
AIR FLOW SENSOR P/N 3900700
MAIN HARNESS P/N 3837901
BLOWER
POWER INLET
LIGHTS
FLUORESCENT BALLAST P/N 12353
FLUORESCENT LAMP F15T8
UV BALLAST P/N 13353
UV LAMP G15T8
JUMPER 8B-GRY TO 14B-BLK FOR VCD
NOTE: PCA FOR REFERENCE ONLY
UV TIMER P/N 3845300
UV OPTION FOR VCD/PCR

C-3

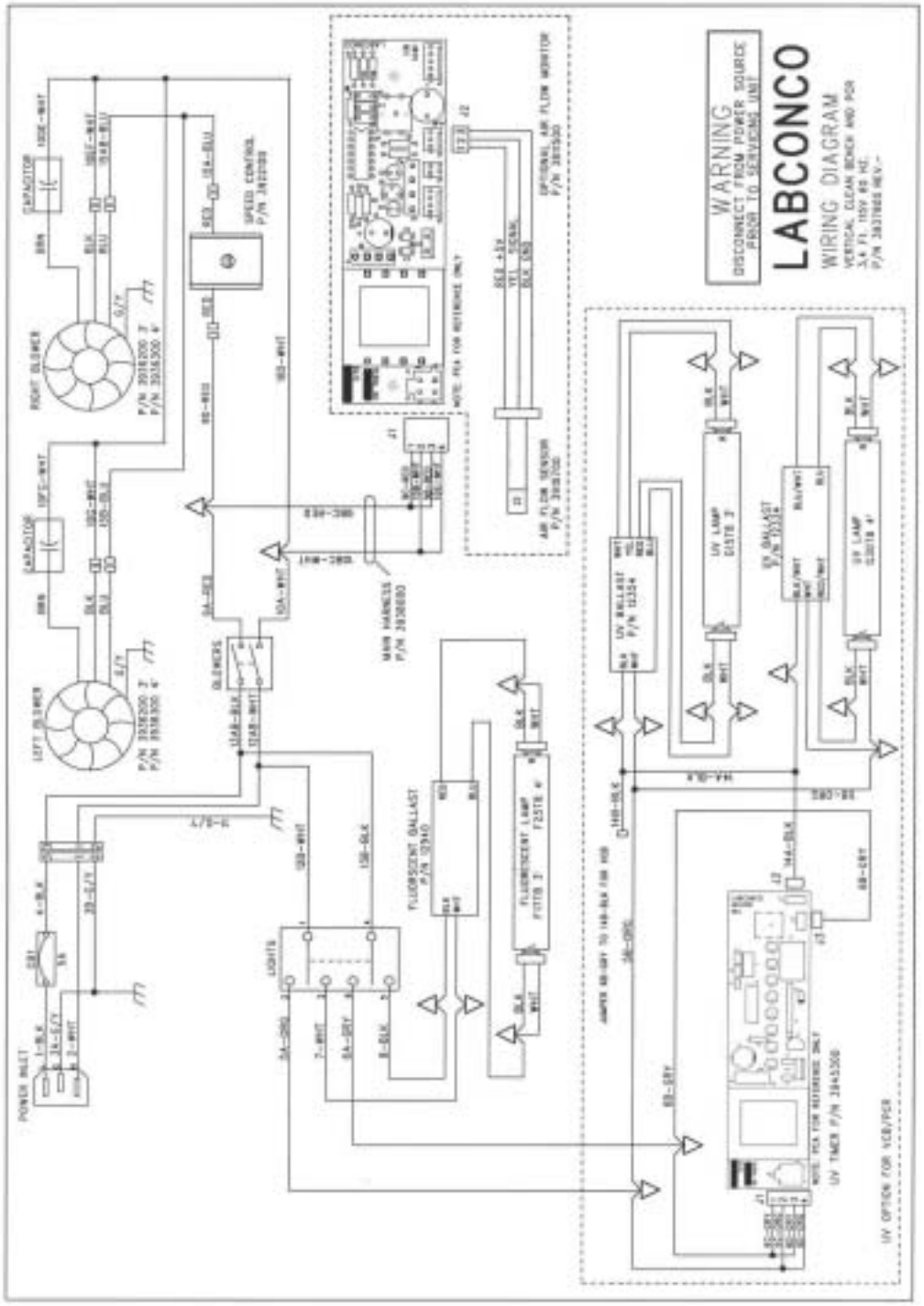
WARNING
DISCONNECT FROM POWER SOURCE PRIOR TO SERVICING UNIT
LABCONCO
WIRING DIAGRAM
VERTICAL CLEAN BENCH AND PCR
3.4 FT. 115V 60 HZ.
P/N 3837868 REV -
RIGHT BLOWER
LEFT BLOWER
CAPACITOR
SPEED CONTROL
P/N 3828300
BLOWERS
MAIN HARNESS
P/N 3838080
OPTIONAL AIR FLOW MONITOR
P/N 3819300
AIR FLOW SENSOR
P/N 3818700
NOTE: PCA FOR REFERENCE ONLY
FLUORESCENT BALLAST
P/N 12940
FLUORESCENT LAMP
F25T8 4'
LIGHTS
POWER INLET
UV BALLAST
P/N 12334
UV LAMP
F25T8 3'
UV BALLAST
P/N 12334
UV LAMP
F25T8 4'
UV TIMER P/N 3845300
UV OPTION FOR VCB/PCR

C-4

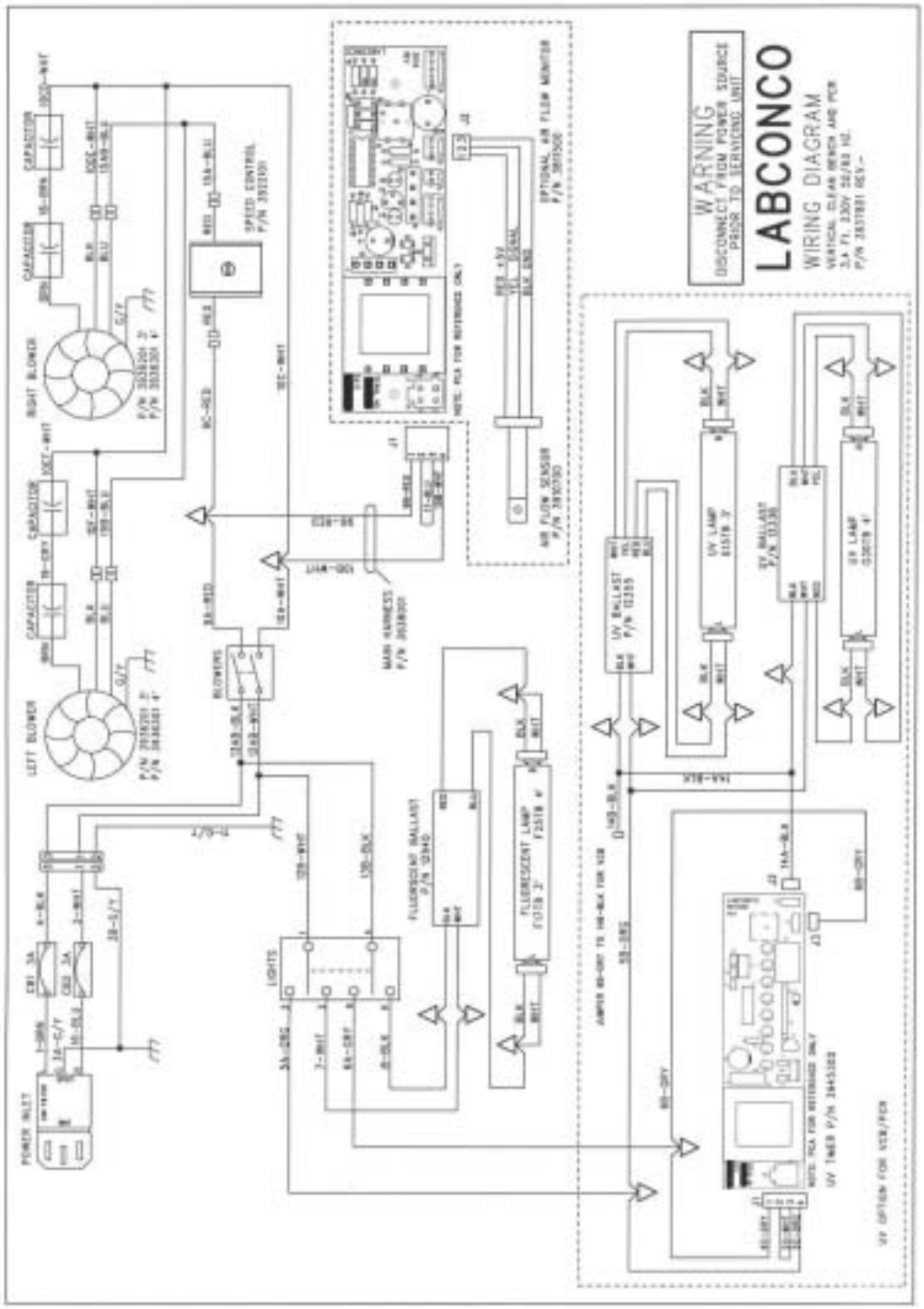
WARNING
DISCONNECT FROM POWER SOURCE PRIOR TO SERVICING UNIT
LABCONCO
WIRING DIAGRAM
CAPACITOR
RIGHT BLOWER
LEFT BLOWER
SPEED CONTROL
BLOWERS
POWER INLET
LIGHTS
FLUORESCENT BALLAST
FLUORESCENT LAMP
UV BALLAST
UV LAMP
OPTIONAL AIR FLOW MONITOR
AIR FLOW SENSOR
MAIN HARNESS
UV OPTION FOR VCB/PCB

APPENDIX D
REFERENCES

Many excellent reference texts and booklets are currently available. The following is a brief listing:

Bryan, D., and R.C. Marback. 1984. Laminar-airflow equipment certification: *What the Pharmacist needs to Know*. American Journal of Hospital Pharmacy. 41.1343-1348.

General Services Administration. 1988. FED-STD-209E Federal Standard – *Clean Room and Work Station Requirements*, Controlled Environment. Washington D.C.

IES Recommended Practice: IES-RP-CC-001-86. *Recommended Practice for HEPA Filters*. Mt. Prospect, IL; Institute for Environmental Sciences. 1986.

IES Recommended Practice: IES-RP-CC-001-96. *Laminar Flow Clean Air Devices.* Mt. Prospect, IL: Institute for Environmental Sciences. 1986.

IES Document: IES-CC-011-85-T. *A Glossary of Terms and Definitions Related to Contamination Control*. Mt. Prospect, IL: Institute for Environmental Sciences. 1985.

ISO 14644-1:1999 *Cleanrooms and Associated Controlled Environment International Organization for Standardization*.

DECLARATION OF CONFORMITY

Application Council Directive(s): 73/23/EEC, 89/336/EEC

Standard(s) to which conformity is declared: EN61010, EN55022, EN50082-1

Manufacturer's Name:	Labconco Corporation
Manufacturer's Address:	8811 Prospect Avenue Kansas City, MO 64132 USA
Importer's Name:	See Shipping/Customs Documents*
Importer's Address:	See Shipping/Customs Documents for your equipment
Type of Equipment:	Purifier Vertical Clean Benches

3970200 Series	2' Purifier Vertical Clean Bench
3970300 Series	3' Purifier Vertical Clean Bench
3970400 Series	4' Purifier Vertical Clean Bench

Serial No.: Various – See Individual Declaration

Year of Manufacture: 2004 and subsequent

I, the undersigned, hereby declare that the equipment specified above conforms to the above Directive(s) and Standard(s).

See individual Declaration of Conformity which will be signed by the importer for your country.

Place: _____
(Signature)

Date: _____
(Full Name)

_____
(Position)

*An individual version of this declaration is included with your shipping/customs documentation.

Labconco P/N 36960-52 REV -

For more information, please contact us:

ExpotechUSA
10700 Rockley Road
Houston, Texas 77099
USA

281-496-0900 [voice]

281-496-0400 [fax]

E-mail: sales@expotechusa.com

Website: www.ExpotechUSA.com